HAMEG®
Instruments

Oscilloskop
HM1507-2

ENGLISH 4S-1507-02E0 02 JUN 1999

SERVICE-MANUAL HM1507-2

Typical board allocation **4**

Block Diagram **5-7**

AT - Board
Diagram 8-9
Top side 10
Bottom side 11

Main - Board
Main - Board Diagram 12-18
Top side 19
Bottom side 20

YF - Board
Diagram 21
Top and bottom side 22

FC - Board
Diagram 23-24
Bottom side 25
Top side 26

FC - Board (Procesor adaptor)
Diagram 27
Top and Bottom side 28

Digital - Board
Digital - Board Diagram 29-34
Top side 35
Bottom side 36

Comp. Tester (CT) - Board
Diagram 37
Top and Bottom side 38

CRT - Board
Diagram 39
Top and Bottom side 40

PS - Board
PS - Board Diagram 41-42
Bottom side 43
Top side 44

PI - Board
Diagram & Top side 45

IF - Board
Diagram 46

Service Manual
Circuit Diagrams

HM1507-2

Technical changes (Upgrade)

Calibrator and Component tester board
Diagram 50
Top and bottom side 51

Digital board
Diagram 52
SMD (bottom) side 53-54

St. 020699. /goRR

CE

KONFORMITÄTSERKLÄRUNG
DECLARATION OF CONFORMITY
DECLARATION DE CONFORMITE

HAMEG® Instruments

Herstellers Manufacturer Fabricant	HAMEG GmbH Kelsterbacherstraße 15-19 D - 60528 Frankfurt	

Bezeichnung / Product name / Designation:

Oszilloskop/Oscilloscope/Oscilloscope

Typ / Type / Type: HM1507-2

mit / with / avec: -

Optionen / Options / Options: HO79-6

mit den folgenden Bestimmungen / with applicable regulations / avec les directives suivantes

EMV Richtlinie 89/336/EWG ergänzt durch 91/263/EWG, 92/31/EWG
EMC Directive 89/336/EEC amended by 91/263/EWG, 92/31/EEC
Directive EMC 89/336/CEE amendée par 91/263/EWG, 92/31/CEE

Niederspannungsrichtlinie 73/23/EWG ergänzt durch 93/68/EWG
Low-Voltage Equipment Directive 73/23/EEC amended by 93/68/EEC
Directive des equipements basse tension 73/23/CEE amendée par 93/68/CEE

Angewendete harmonisierte Normen / Harmonized standards applied / Normes harmonisées utilisées

Sicherheit / Safety / Sécurité
EN 61010-1: 1993 / IEC (CEI) 1010-1: 1990 A 1: 1992 / VDE 0411: 1994
Überspannungskategorie / Overvoltage category / Catégorie de surtension: II
Verschmutzungsgrad / Degree of pollution / Degré de pollution: 2

Elektromagnetische Verträglichkeit / Electromagnetic compatibility
Compatibilité électromagnétique

EN 50082-2: 1995 / VDE 0839 T82-2
ENV 50140: 1993 / IEC (CEI) 1004-4-3: 1995 / VDE 0847 T3
ENV 50141: 1993 / IEC (CEI) 1000-4-6 / VDE 0843 / 6
EN 61000-4-2: 1995 / IEC (CEI) 1000-4-2: 1995 / VDE 0847 T4-2
Prüfschärfe / Level / Niveau = 2

EN 61000-4-4: 1995 / IEC (CEI) 1000-4-4: 1995 / VDE 0847 T4-4:
Prüfschärfe / Level / Niveau = 3

EN 50081-1: 1992 / EN 55011: 1991 / CISPR11: 1991 / VDE0875 T11: 1992
Gruppe / group / groupe = 1, Klasse / Class / Classe = B

Datum /Date /Date
23.04.1998

Unterschrift / Signature /Signatur

Dr. J. Herzog
Technical Manager/Directeur Technique

General information regarding the CE marking

HAMEG instruments fulfill the regulations of the EMC directive. The conformity test made by HAMEG is based on the actual generic- and product standards. In cases where different limit values are applicable, HAMEG applies the severer standard. For emission the limits for residential, commercial and light industry are applied. Regarding the immunity (susceptibility) the limits for industrial environment have been used.

The measuring- and data lines of the instrument have much influence on emmission and immunity and therefore on meeting the acceptance limits. For different applications the lines and/or cables used may be different. For measurement operation the following hints and conditions regarding emission and immunity should be observed:

1. Data cables

For the connection between instruments resp. their interfaces and external devices, (computer, printer etc.) sufficiently screened cables must be used. Without a special instruction in the manual for a reduced cable length, the maximum cable length of a dataline must be less than 3 meters long. If an interface has several connectors only one connector must have a connection to a cable.

Basically interconnections must have a double screening. For IEEE-bus purposes the double screened cables HZ72S and HZ72L from HAMEG are suitable.

2. Signal cables

Basically test leads for signal interconnection between test point and instrument should be as short as possible. Without instruction in the manual for a shorter length, signal lines must be less than 3 meters long.

Signal lines must screened (coaxial cable - RG58/U). A proper ground connection is required. In combination with signal generators double screened cables (RG223/U, RG214/U) must be used.

3. Influence on measuring instruments.

Under the presence of strong high frequency electric or magnetic fields, even with careful setup of the measuring equipment an influence of such signals is unavoidable.
This will not cause damage or put the instrument out of operation. Small deviations of the measuring value (reading) exceeding the instruments specifications may result from such conditions in individual cases.

HAMEG GmbH

The 150 MHz (200MS/s) Analog-/Digital-Oscilloscope HM1507-2

Autoset
Auto Cursor
Readout / Cursor
Save / Recall
2 Reference Memories
Dual Time Base
Component Tester
1kHz/1MHz Calibrator
RS232 Interface

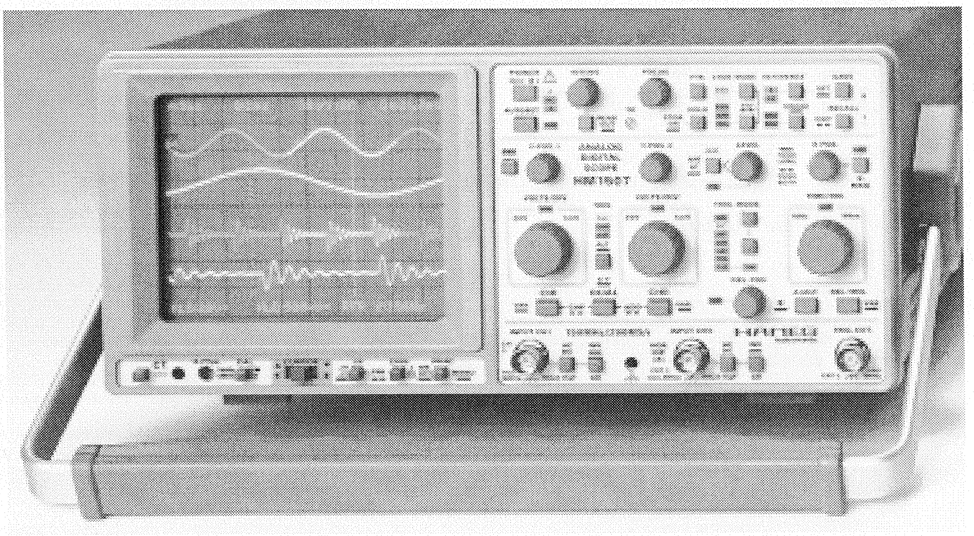

Analog:
- **2 x DC to 150MHz, 2 x 1mV-50V/div**
- **Timebase A with Trig. DC to 250MHz**
- **Timebase B with 2nd Trig. to 250MHz**
- **Trig. DC to 250MHz, TV Sync. Separator**
- **1kHz/1MHz Calibrator, CRT with 14kV**

Digital:
- **Refresh, Single, Roll-, Envelope-, Average-,XY-Mode**
- **Max.Sampling Rate 200MS/s, Storage 2 x 2048 x 8 bit**
- **Time Base A: 100s - 50ns/div., B: 20ms - 50ns/div.**
- **Pre Trigger 25-50-75-100%, Post Trigger 25-50-75%**
- **Screen Refresh 180/s, Dot Join (linear)**

Specifications

Vertical Deflection
Operating modes: Channel I or II separate both Channels (alternated or chopped)
Chopper frequency: approx. 0.5MHz)
Sum or **Difference:** from CH I and CH II
Invert: CH I and CH II
XY-Mode: via channel I (Y) and channel II(X)
Frequency range: DC to 150MHz (-3dB)
Risetime: <2.3ns
Overshoot: ≤1%
Deflection coefficient: 14 calibrated positions from 1mV/div to 20V/div in 1-2-5 sequence, variable 2.5:1 to min. 50V/div.
Accuracy in calibrated positions
1mV/div – 2mV/div: ±5% (DC-10MHz (-3dB))
5mV/div – 20V/div: ±3%
Input impedance: 1MΩ II 15pF
Input coupling: DC-AC-GD (ground)
Input voltage: max. 400V (DC + peak AC)
Delay line: approx. 70ns

Triggering
Automatic (peak to peak): 20Hz-250MHz (≥0.5div.)
Normal with level control: DC-250MHz (≥0.5div.)
Indicator for trigger action: LED
Slope: positive or negative
Sources: Channel I or II, line and external
ALT. Triggering: CH I/CH II (≥ 0.8div.)
Coupling: **AC** (10 – 250MHz)
DC (0 – 250MHz)
HF (50kHz – 250MHz)
LF (0 – 1.5kHz)
NR (Noise reject)0 - 50MHz (≥ 0.8div.)
Triggering time base B: normal with level control and slope selection (0 – 250 MHz)
External: ≥0.3V_{pp} (0 – 250MHz)
Active TV Sync. Separator: field & line, + / –

Horizontal Deflection
Analog Time Base:
Accuracy in calibr. position 3%; 1-2-5 sequence
A: 0.5s-50ns/div.
B: 20ms-50ns/div.
Operating modes: A or B, alternate A/B
Variable: 2.5:1 up to 1.25s/div.
X-MAG. x10 (±5%) max. 5ns/div.
Holdoff time: variable to approx. 10:1
Bandwidth X-amplifier: 0 – 3MHz (-3dB)
X-Y phase shift: <3° below 220kHz
Digital Time Base:
Accuracy: 3%; 1-2-5 sequence
A: 100s-0.5µs/div.
B: 20ms-0.5µs/div.
Operating modes: A or B, alternate A/B
X-MAG. x10 (±5%): 50ns/div.
Bandwidth X-Amplifier: 0 – 20MHz (-3dB)
X-Y phase shift: <3° below 20MHz
Input X-amplifier: via Channel II
Sensitivity: see CH II

Digital Storage
Operating modes: Refresh, Roll, Single, XY Average (2 to 512 waveforms), Envelope
Dot Join function: automatically
Acquisition (real time)
8 bit flash A/D max. 200MS/s
Display refresh rate: max. 180/s
Memory & display: 2k x 8bit per channel
Reference memory: 2 waveforms 2k x 8bit
Saved in: (EEPROM).
Resolution (samples/div.): **X** 200/div.
Y 25 /div.
XY 25 x 25/div.
Pre-/Post Trigger: 25,50,75,100, -25,-50,-75%

Operation / Control
Manual: front panel switches
Auto Set: signal related automatic parameter selection
Save & Recall: 9 user defined parameter settings

Readout & Cursor (analog/digital)
Display of parameter settings and other functions on the screen. Triggerpoint indication. Cursor measurement of ΔU, Δt or 1/Δt (frequency), separate or in tracking mode.
Readout intensity: separately adjustable.

Interface
PC remote control: built in RS232 interface
Option: HO79-6 Multifunction-Interface IEEE-Bus, RS232, and Centronics
Output formats(HO79-6): PCL, Post Script HPGL, EPSON

Component Tester
Test voltage: max. $7V_{rms}$ (o/c).
Test current: max. $7mA_{rms}$ (s/c)
Test frequency: approx.50Hz
One test lead is grounded (Safety Earth)

General Information
CRT: D14-375GY, 8x10cm internal graticule
Acceleration voltage: approx. 14kV
Trace rotation: adjustable on front panel
Calibrator: 0.2V ±1%, ≈ 1kHz/1MHz (tr <4ns)
Line voltage: 100-240V AC ±10%, 50/60Hz
Power consumption: approx. 42 Watt at 50Hz
Min./Max. ambient temperature: 0°C...+40°C
Protective system: Safety class I (IEC1010-1)
Weight: approx. 5.6kg (12.4lbs)
Color: techno-brown
Cabinet: **W** 285, **H** 125, **D** 380 mm
Lockable tilt handle

Subject to change without notice 06/98

Accessories supplied:
Operators Manual, 4 Disks, Line Cord, 2 Probes 10:1

Typical board allocation

Typical boards allocation (Top view)

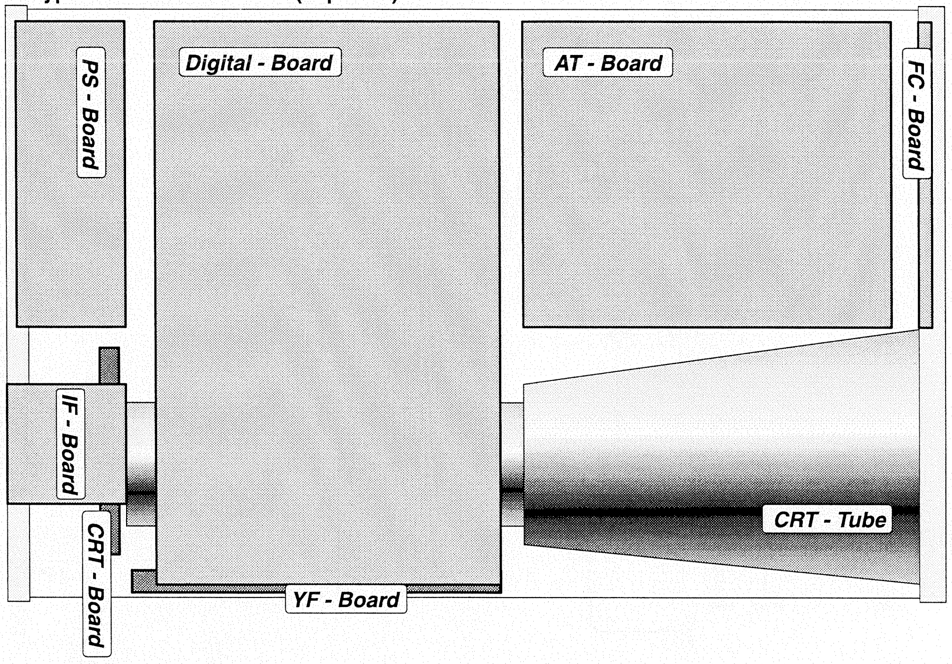

Typical boards allocation (Back side)

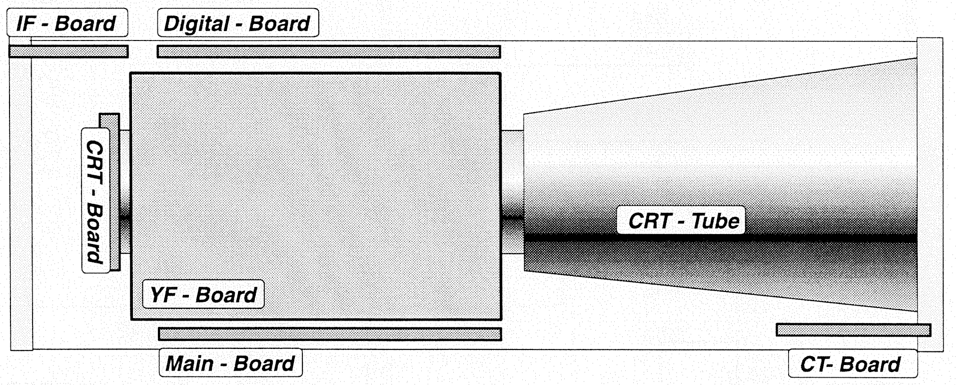

Typical boards allocation (Bottom view)

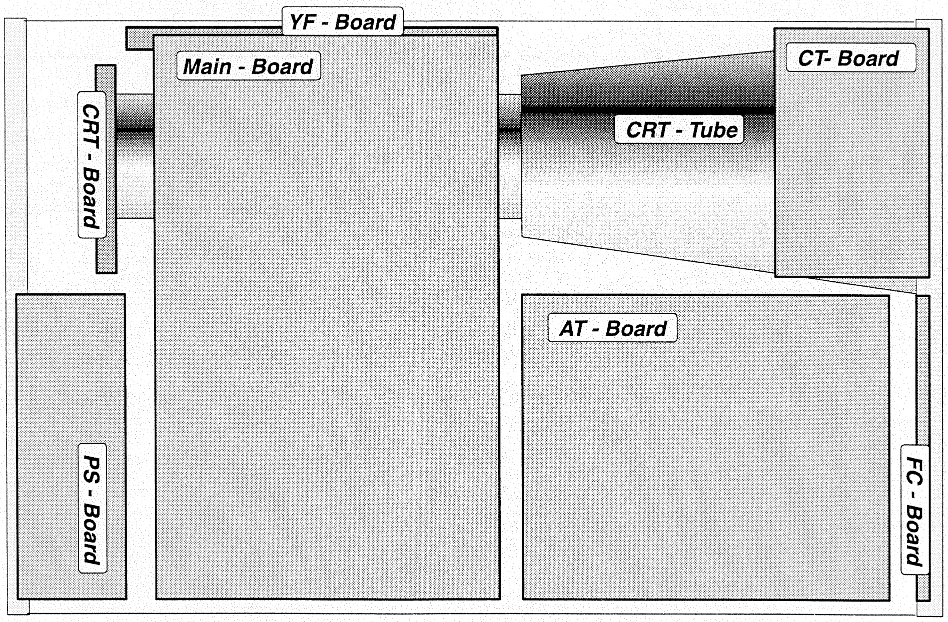

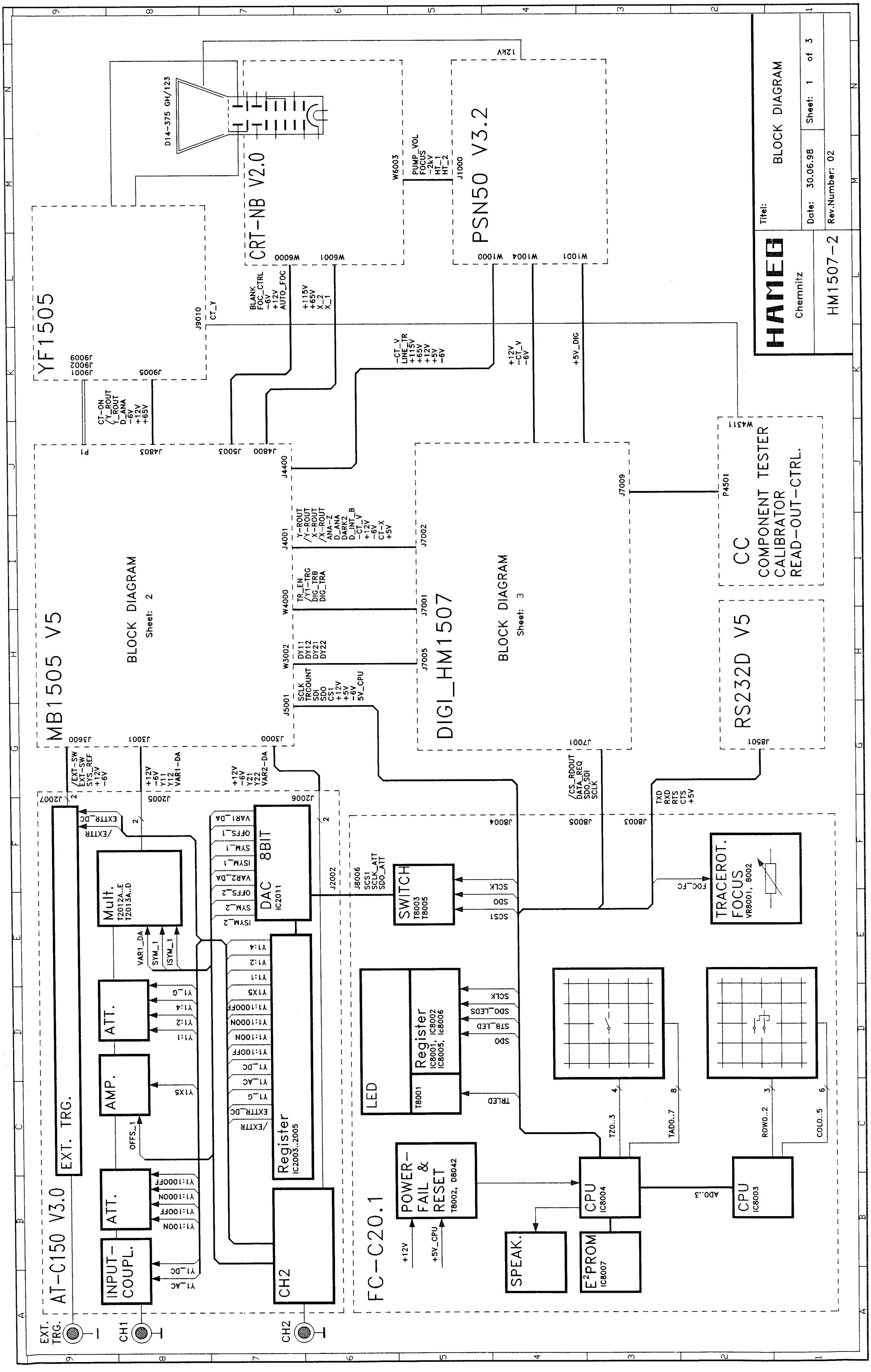
HAMEG
Chemnitz
HM1507-2
Titel: BLOCK DIAGRAM
Date: 30.06.98
Sheet: 1 of 3
Rev.Number: 02
CRT-NB V2.0
PSN50 V3.2
YF1505
MB1505 V5
BLOCK DIAGRAM
Sheet: 2
DIGI_HM1507
BLOCK DIAGRAM
Sheet: 3
CC
COMPONENT TESTER
CALIBRATOR
READ-OUT-CTRL.
RS232D V5
AT-C150 V3.0
FC-C20.1
EXT. TRG.
INPUT-COUPL.
ATT.
AMP.
Mult.
DAC 8BIT
Register
CH2
SWITCH
TRACEROT. FOCUS
LED
POWER-FAIL & RESET
CPU
SPEAK.
E2PROM
EXT. TRG.
CH1
CH2

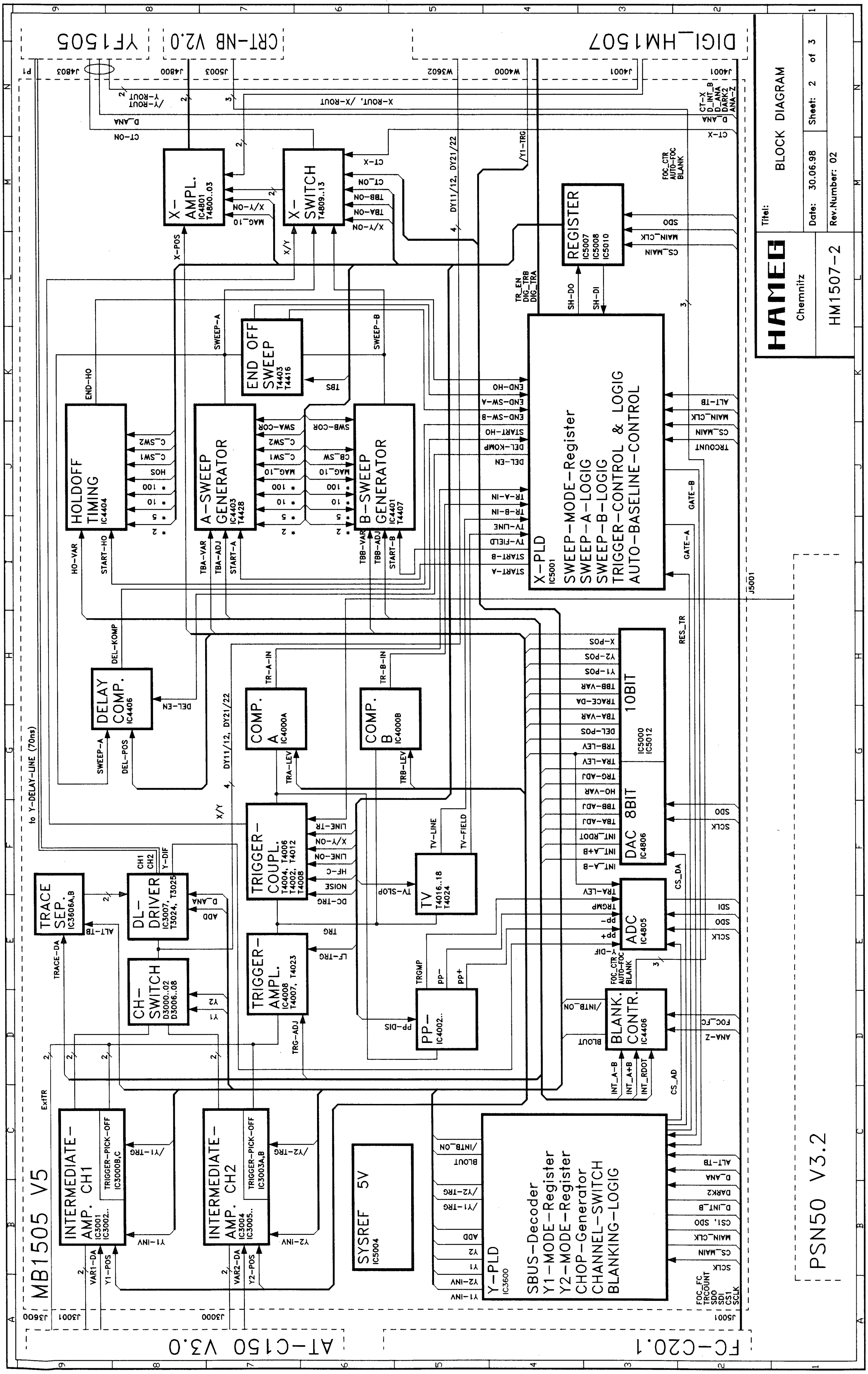

Subject to change without notice

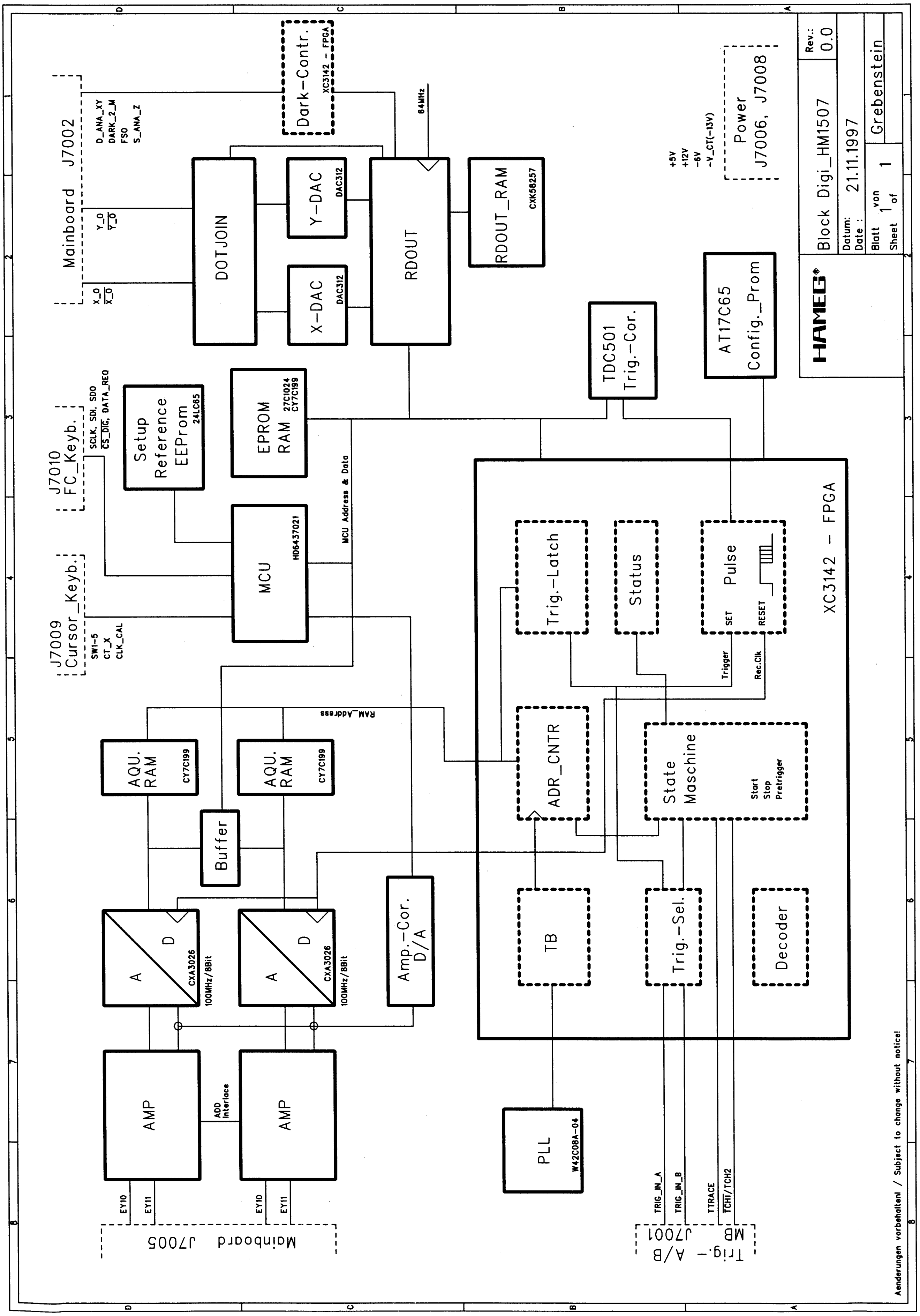

Mainboard J7002
D_ANA_XY
DARK_2_M
FSO
S_ANA_Z
Dark-Contr.
XC3142 - FPGA
64MHz
DOTJOIN
Y-DAC
DAC312
X-DAC
DAC312
RDOUT
RDOUT_RAM
CXK58257
Power
J7006, J7008
+5V
+12V
-6V
-V_CT(-13V)
Block Digi_HM1507
Rev.:
0.0
Datum:
Date :
21.11.1997
Grebenstein
Blatt
Sheet
von
of
1
HAMEG
AT17C65
Config._Prom
TDC501
Trig.-Cor.
EPROM
RAM
27C1024
CY7C199
Setup
Reference
EEProm
24LC65
J7010
FC_Keyb.
SCLK, SDI, SDO
CS_DIG, DATA_REQ
MCU
HD6437021
MCU Address & Data
J7009
Cursor_Keyb.
SW1-5
CT_X
CLK_CAL
XC3142 - FPGA
Trig.-Latch
Status
Pulse
SET
RESET
Trigger
Rec.Clk
RAM_Address
AQU.
RAM
CY7C199
ADR_CNTR
State
Maschine
Start
Stop
Pretrigger
Buffer
Amp.-Cor.
D/A
TB
Trig.-Sel.
Decoder
A
D
CXA3026
100MHz/8Bit
AMP
ADD
Interlace
PLL
W42C08A-04
EY10
EY11
Mainboard J7005
TRIG_IN_A
TRIG_IN_B
TTRACE
TCH1/TCH2
Trig.- A/B
J7001 MB
Aenderungen vorbehalten! / Subject to change without notice!

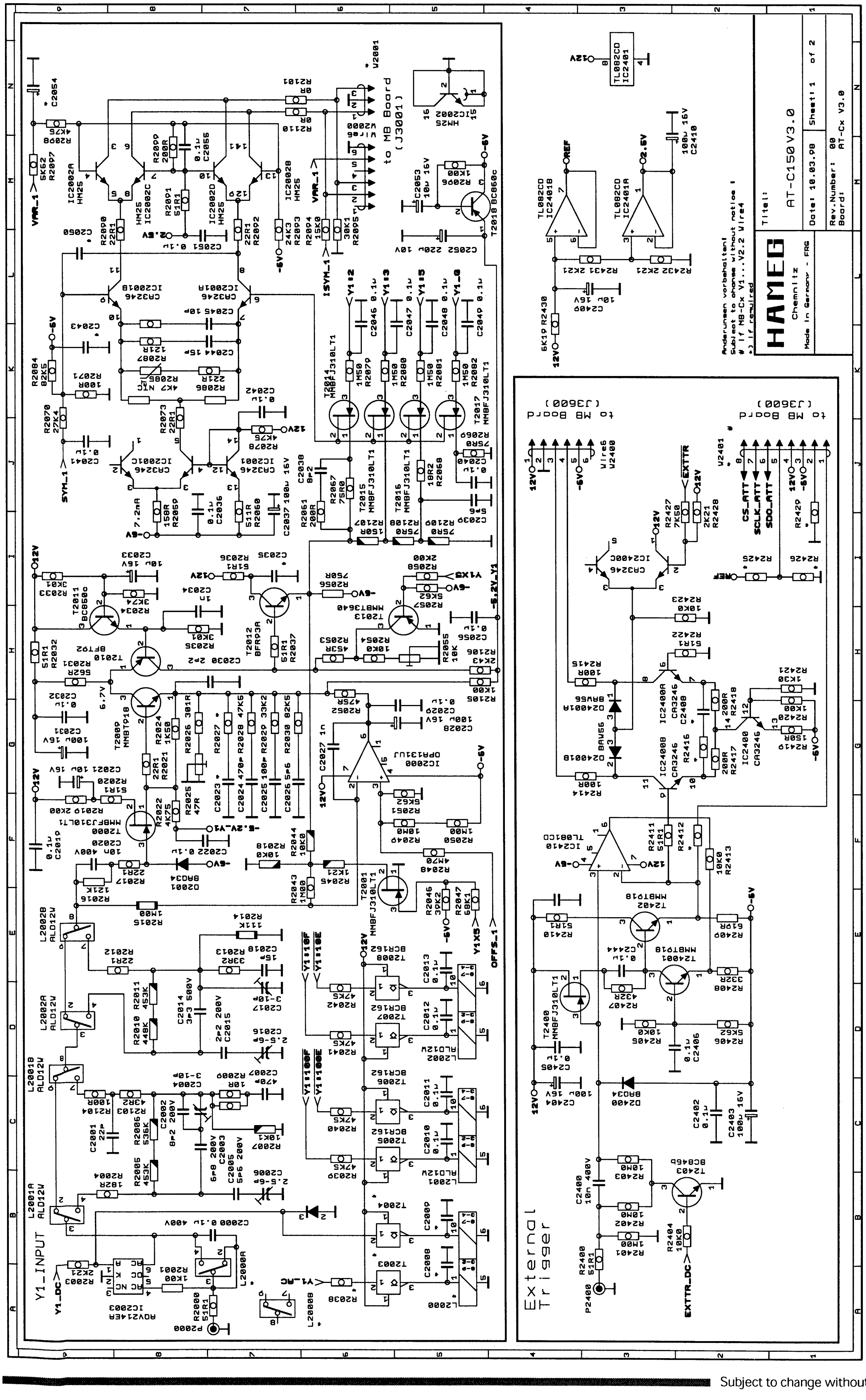

 Subject to change without notice

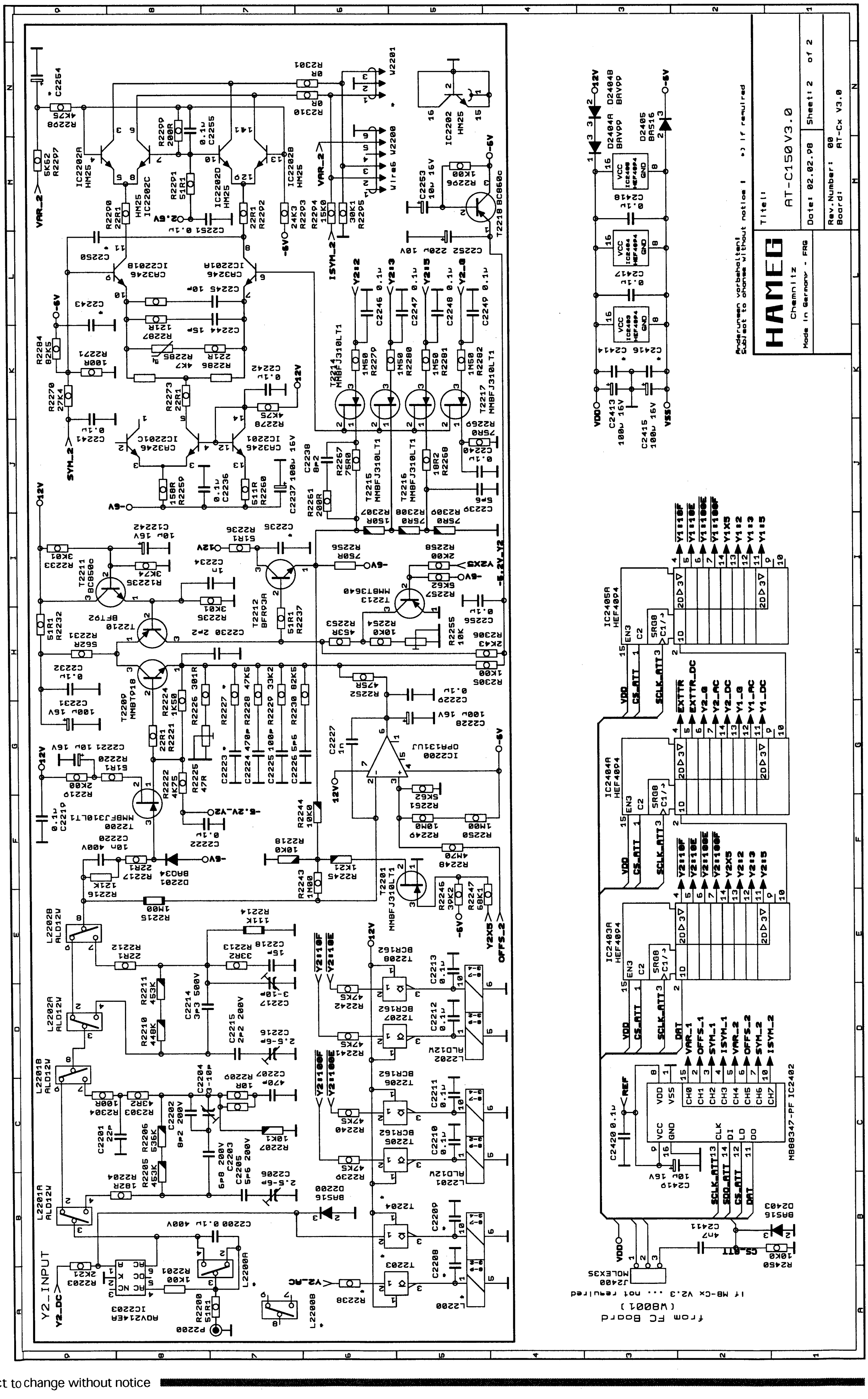
HAMEG
Chemnitz
Made in Germany - FRG
AT-C150V3.0
Date: 02.02.98
Sheet: 2 of 2
Y2_INPUT

AT - Board Diagram Top side

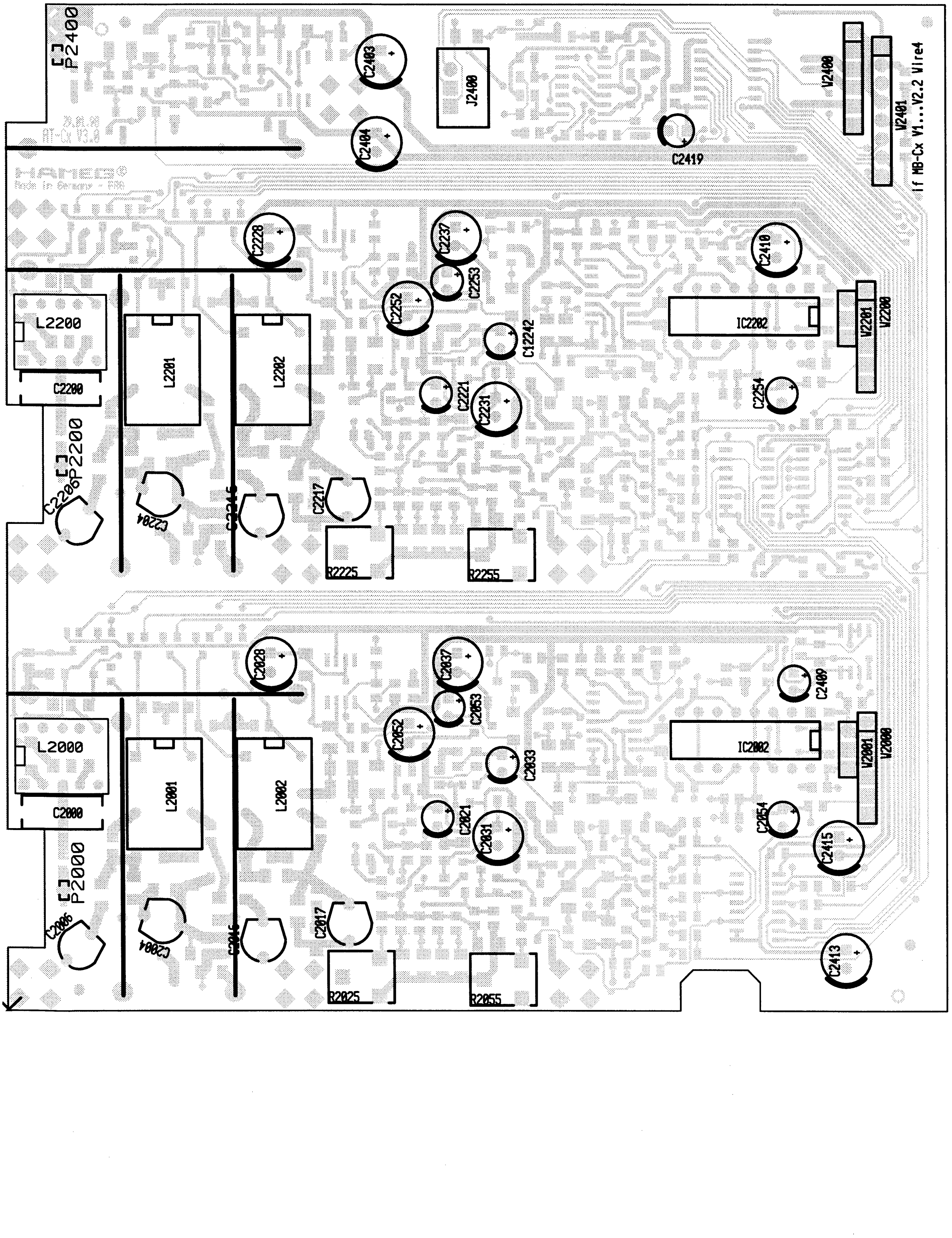

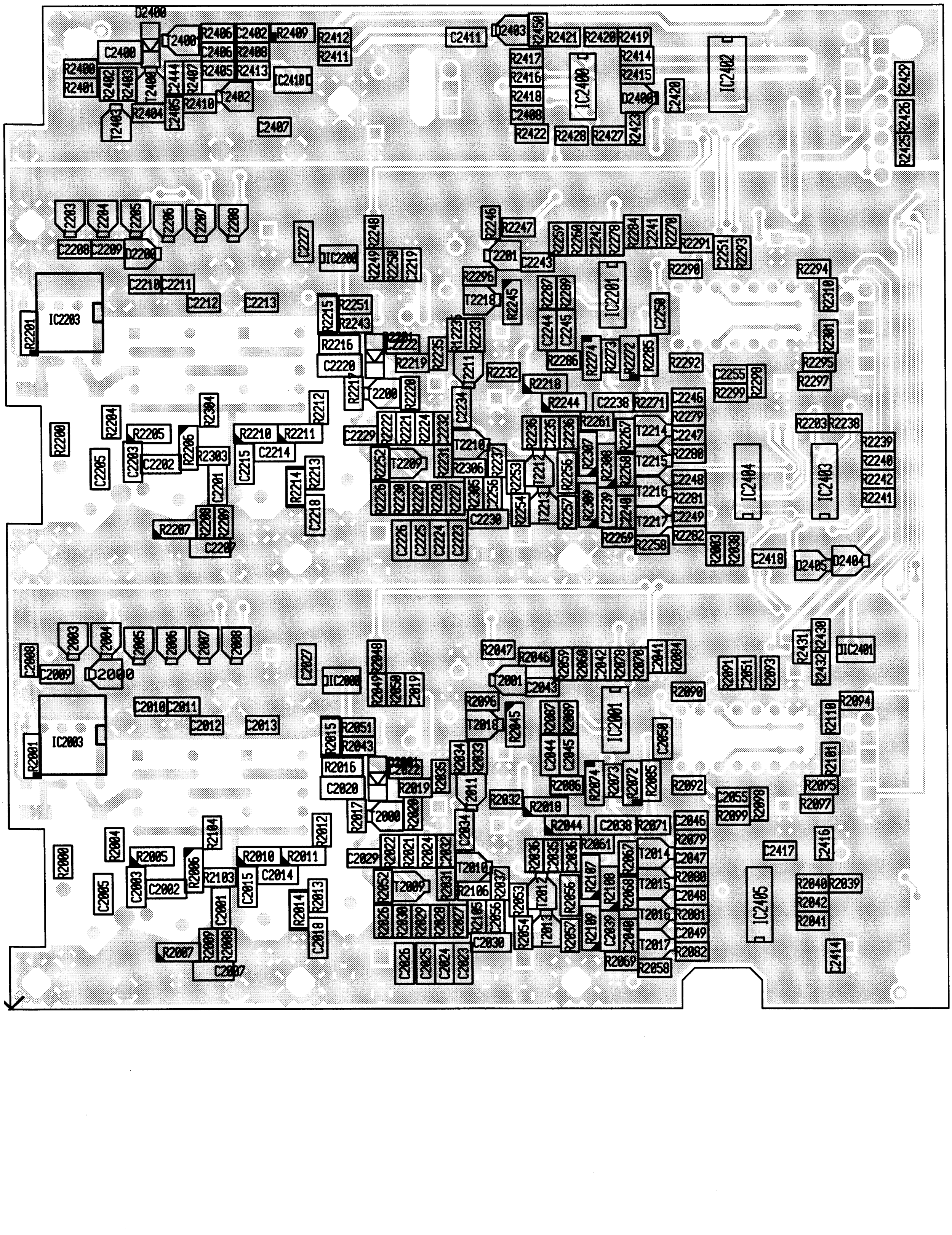

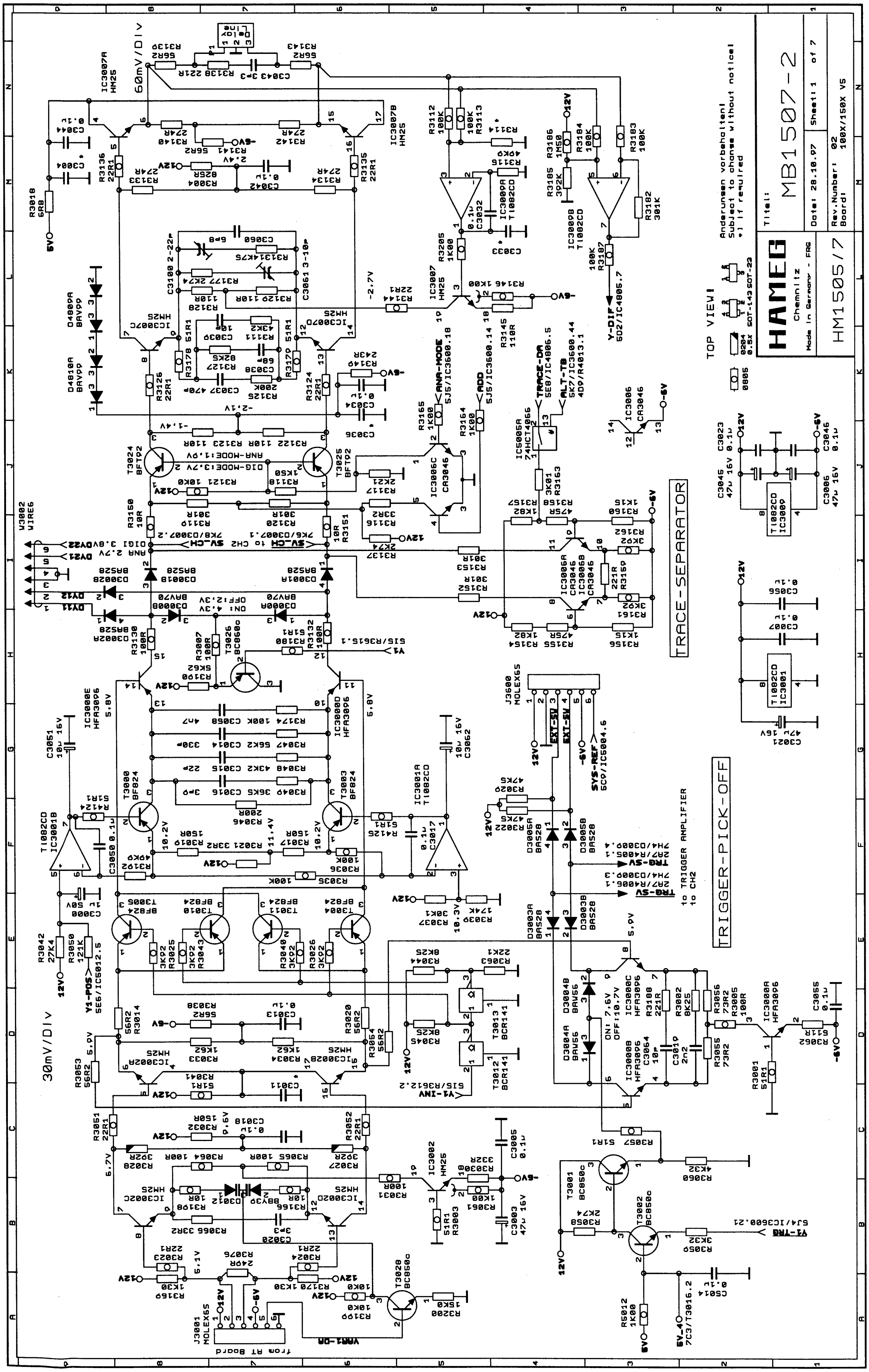

Subject to change without notice

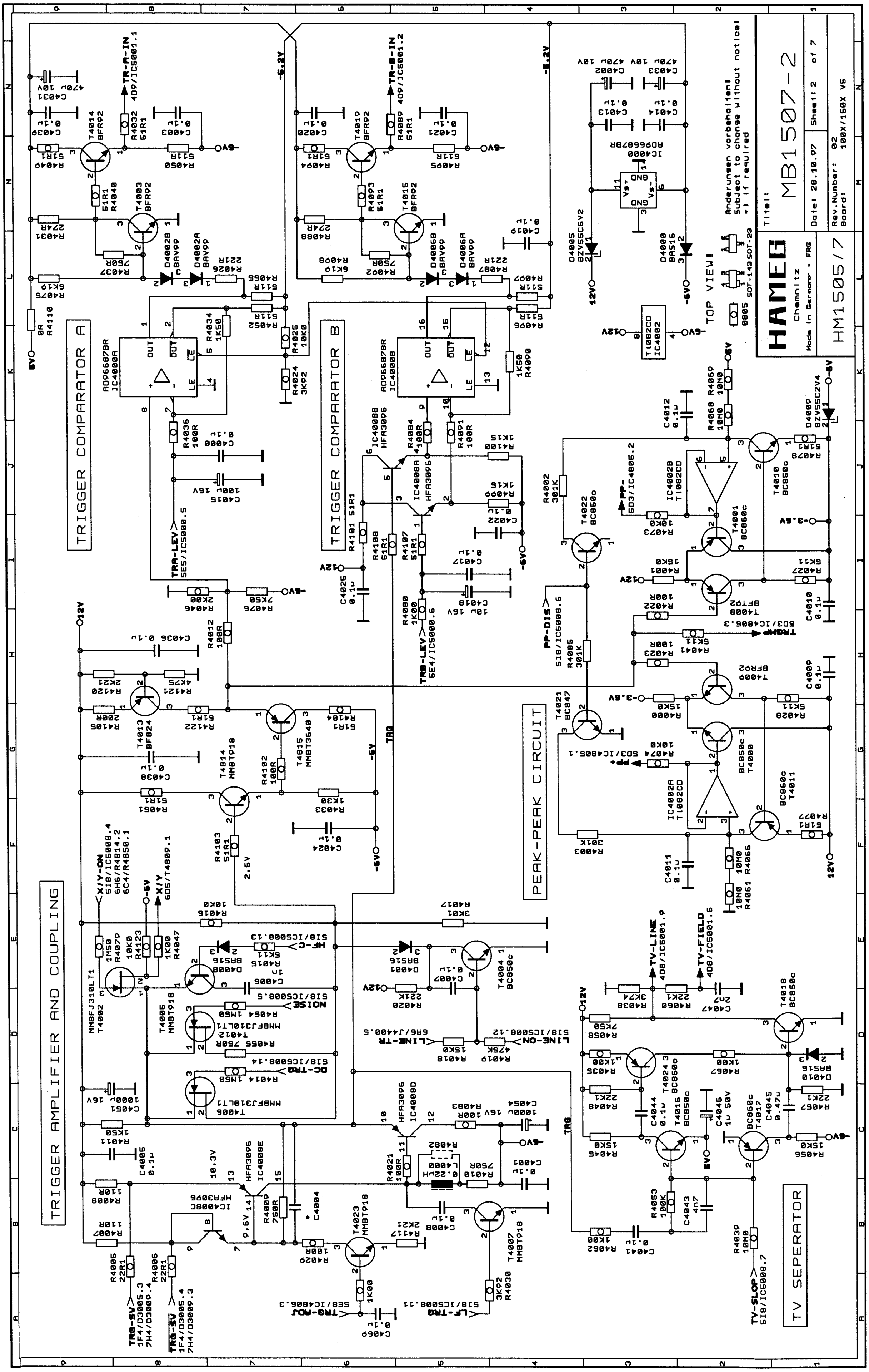
TRIGGER COMPARATOR A
TRIGGER COMPARATOR B
PEAK-PEAK CIRCUIT
TRIGGER AMPLIFIER AND COUPLING
TV SEPERATOR
HAMEG
MB1507-2
HM1505/7
Sheet: 2 of 7

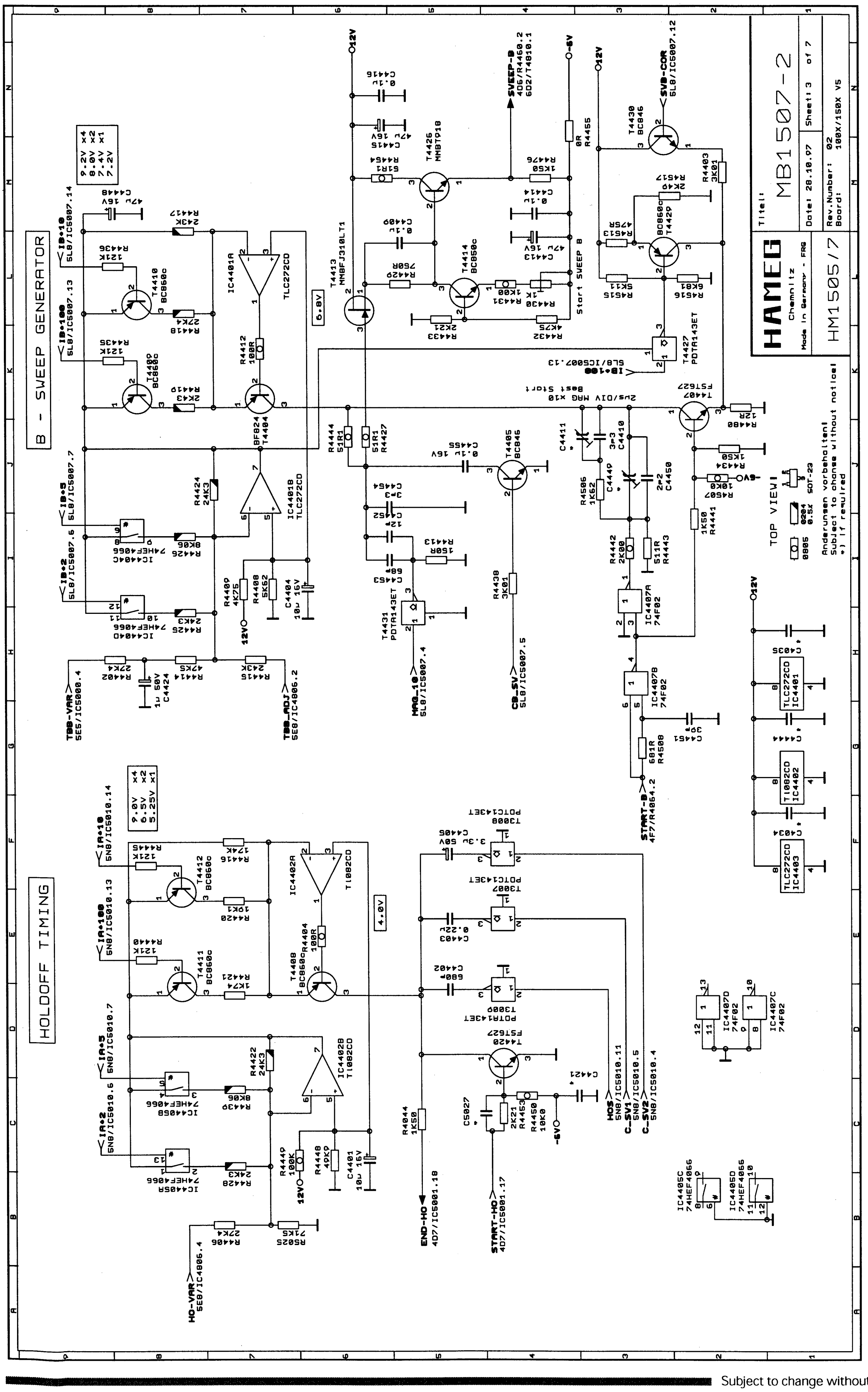
B - SWEEP GENERATOR
HOLDOFF TIMING
HAMEG
MB1507-2
HM1505/7

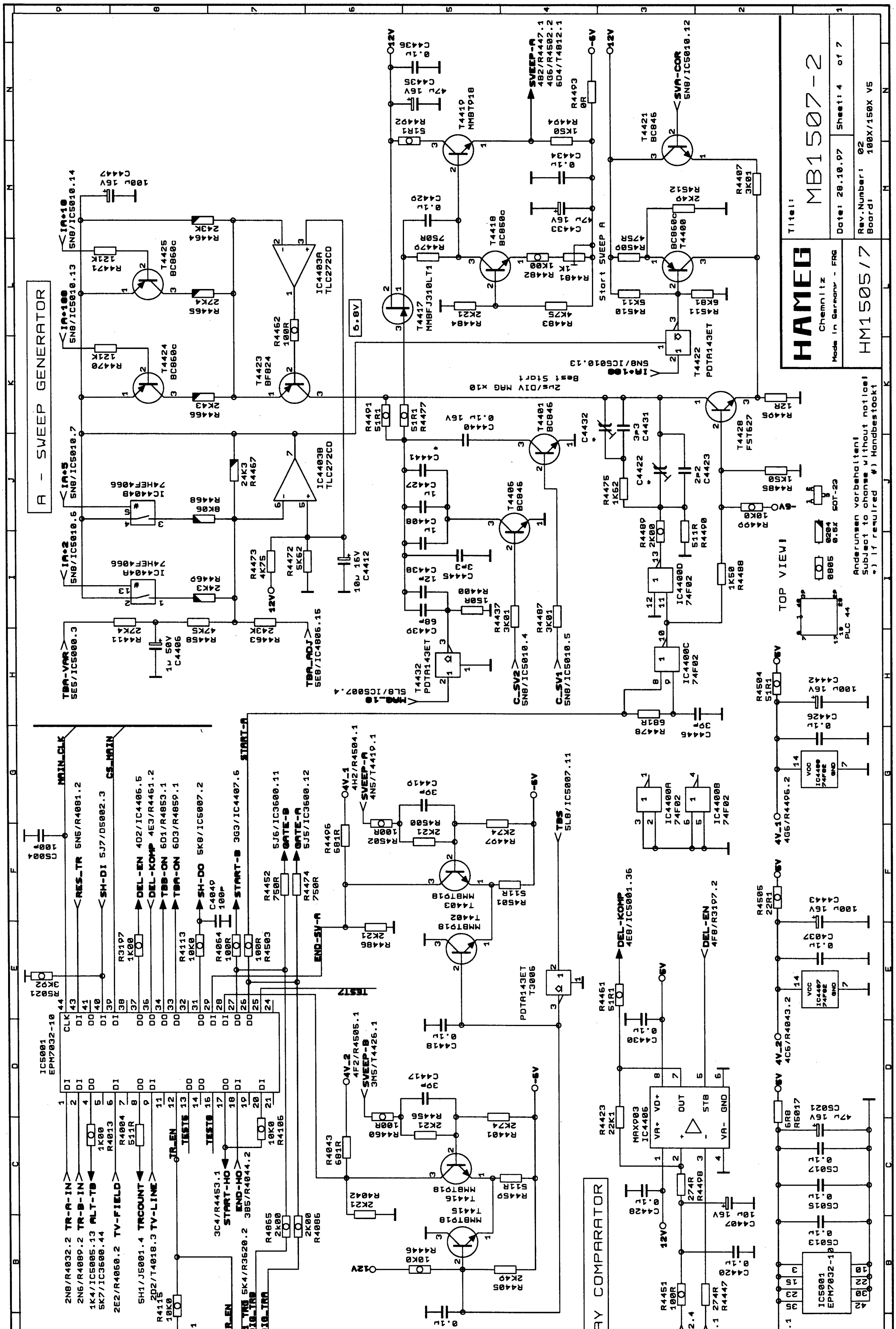
A - SWEEP GENERATOR
DELAY COMPARATOR
HAMEG
MB1507-2
HM1505/7

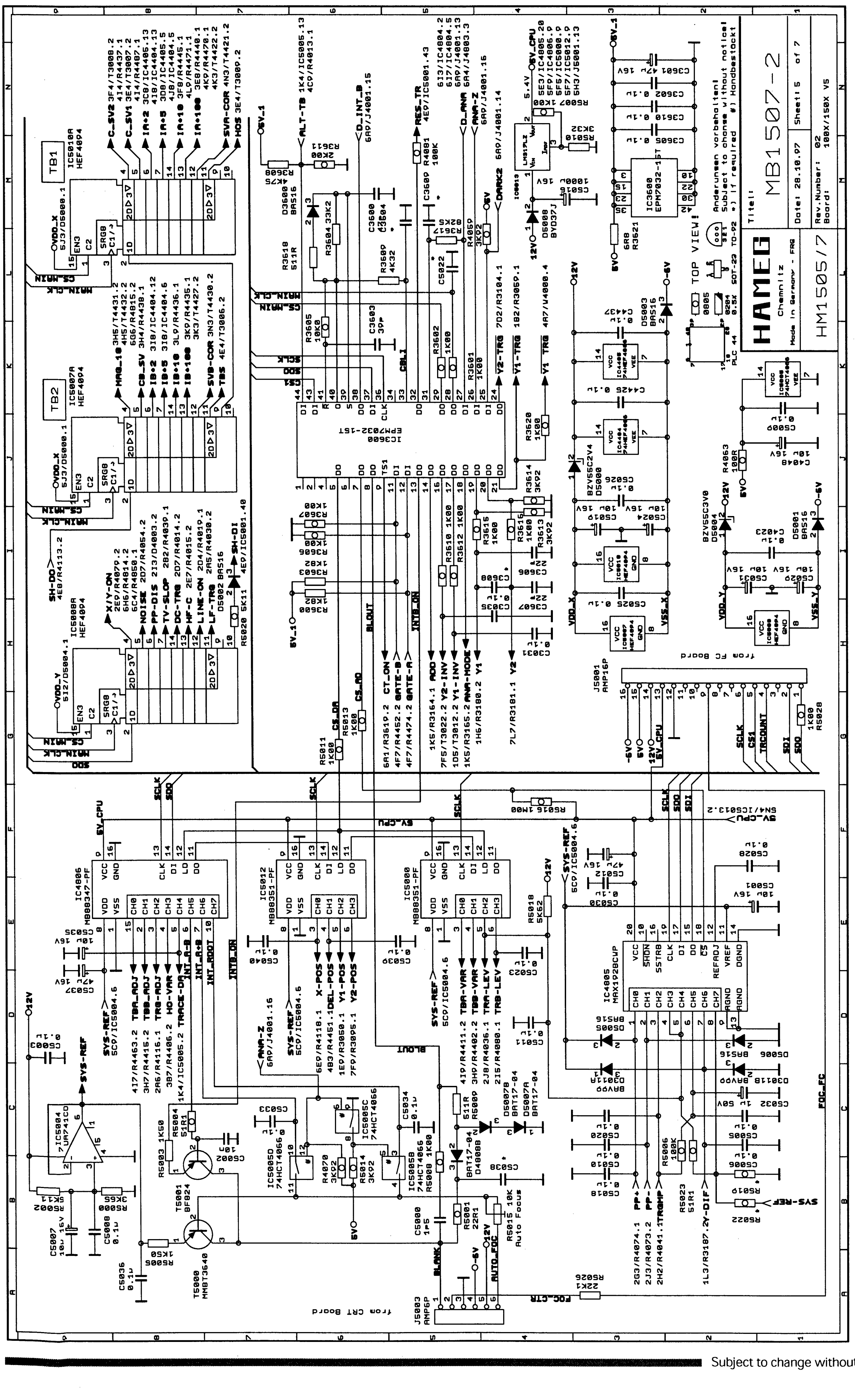
HAMEG
Chemnitz
Made in Germany - FRG
HM1505/7
MB1507-2
TOP VIEW!
from FC Board
from CRT Board

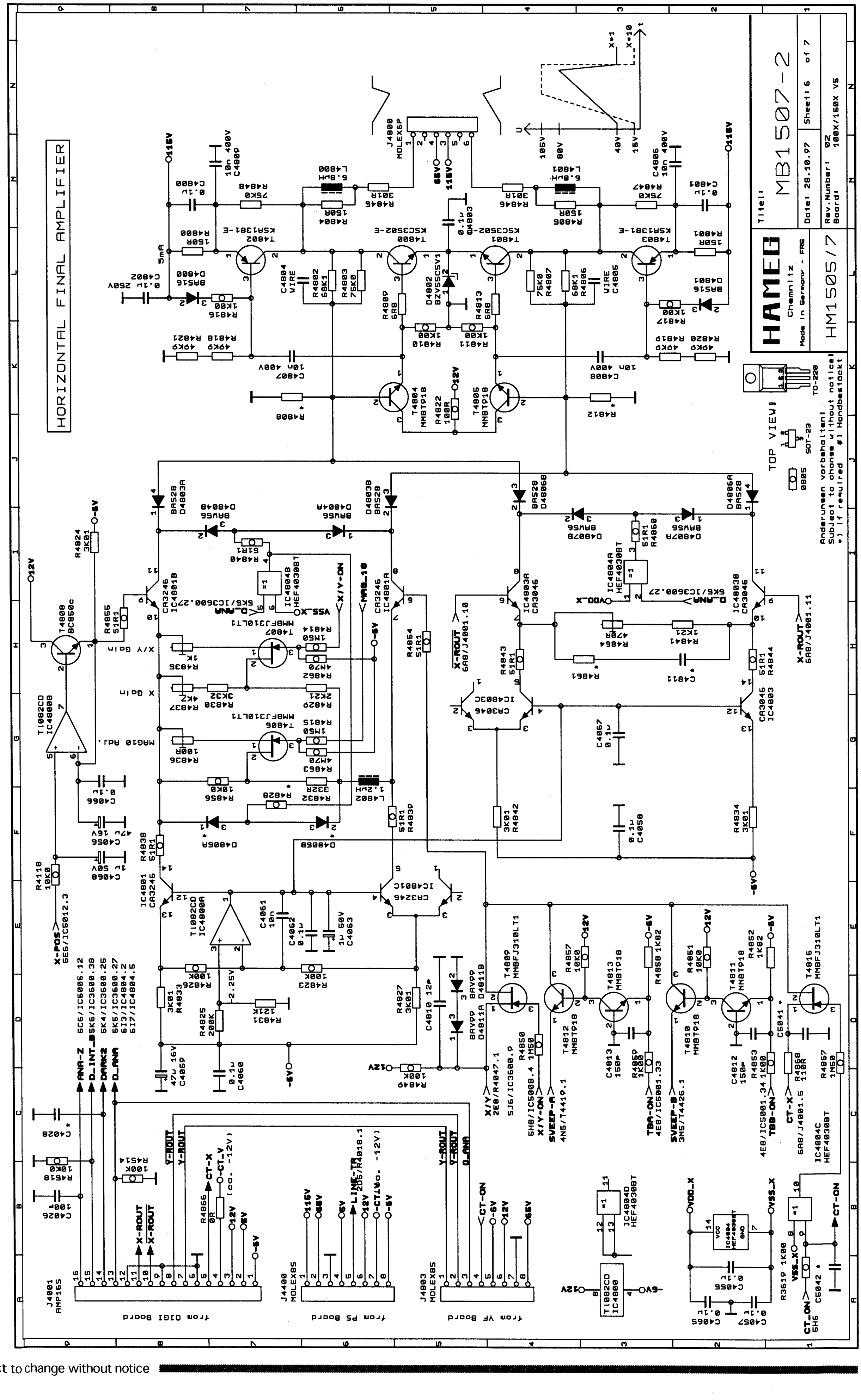
HORIZONTAL FINAL AMPLIFIER
HAMEG
MB1507-2
HM1505/7
from DIGI Board
from PS Board
from YF Board

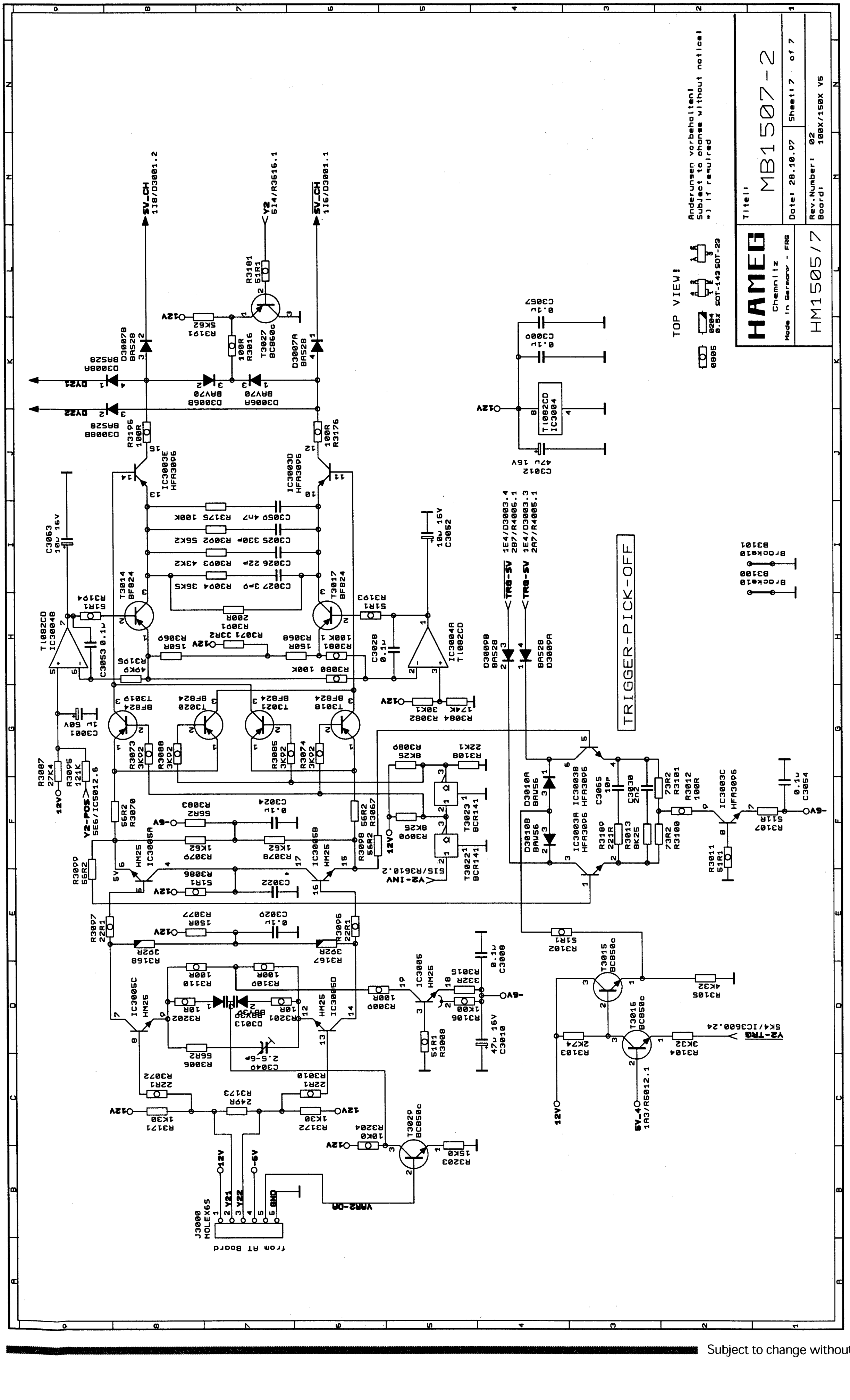
TRIGGER-PICK-OFF
HAMEG
Chemnitz
MB1507-2
HM1505/7
from AT Board
TOP VIEW!

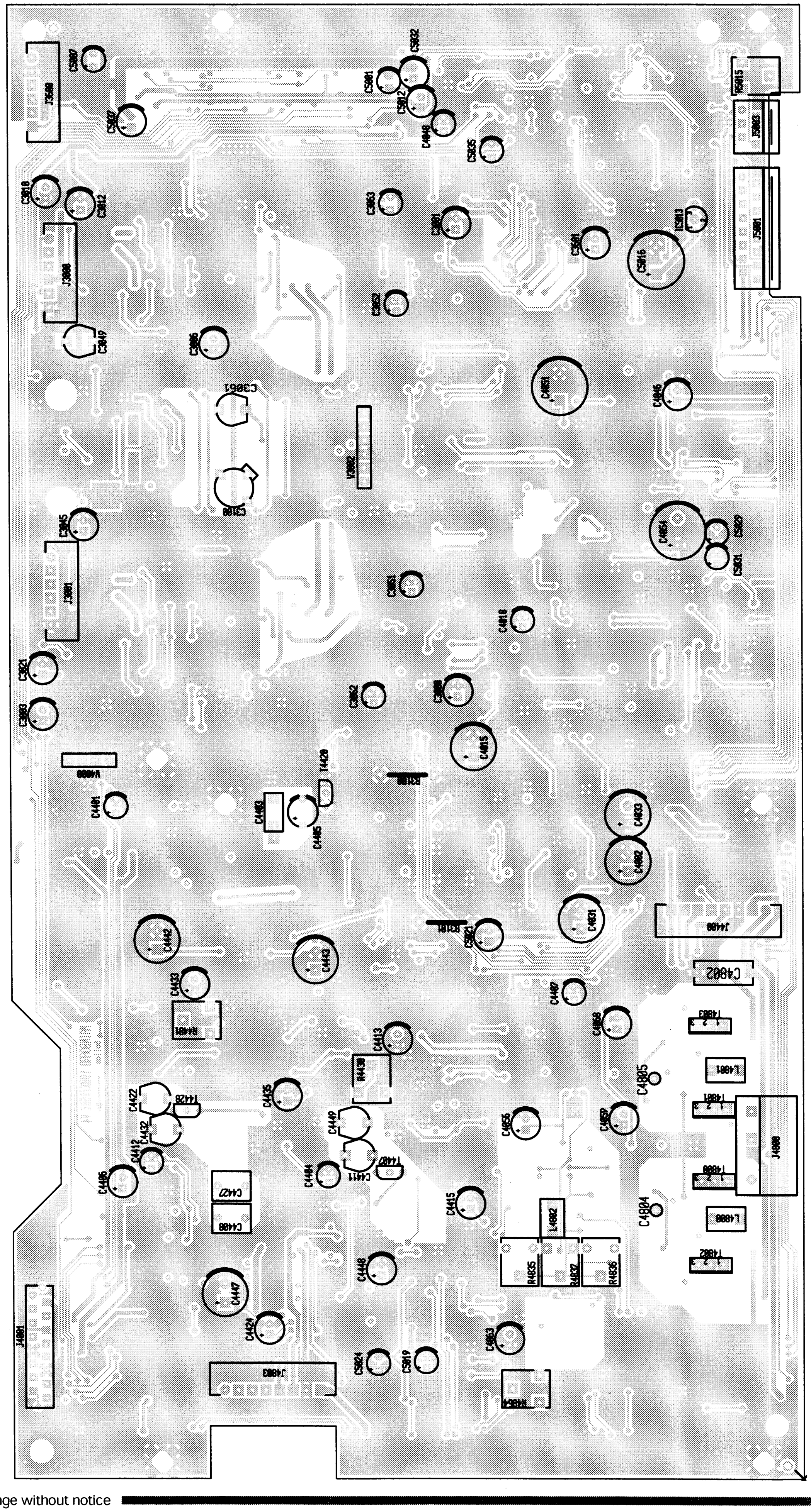

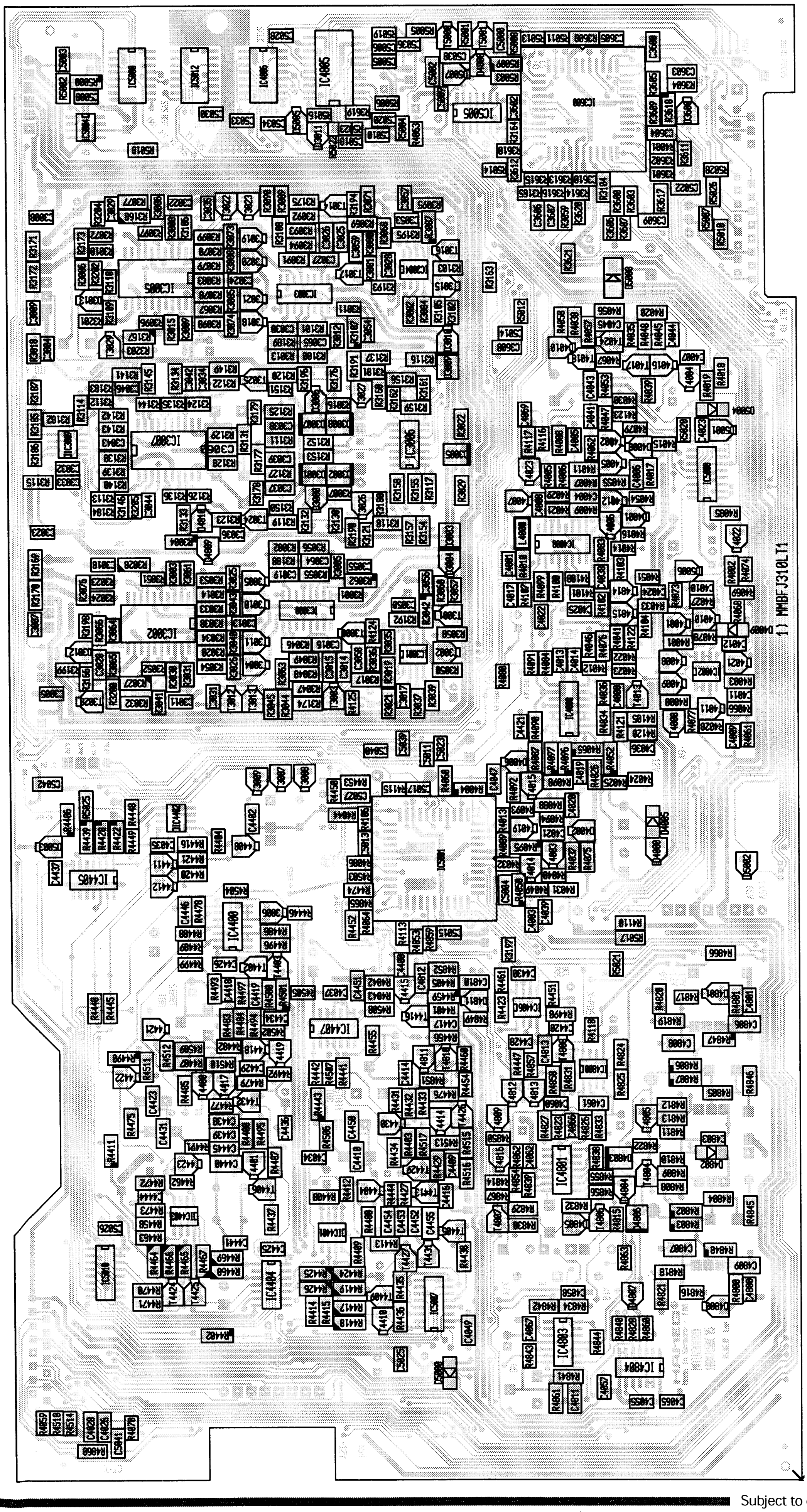

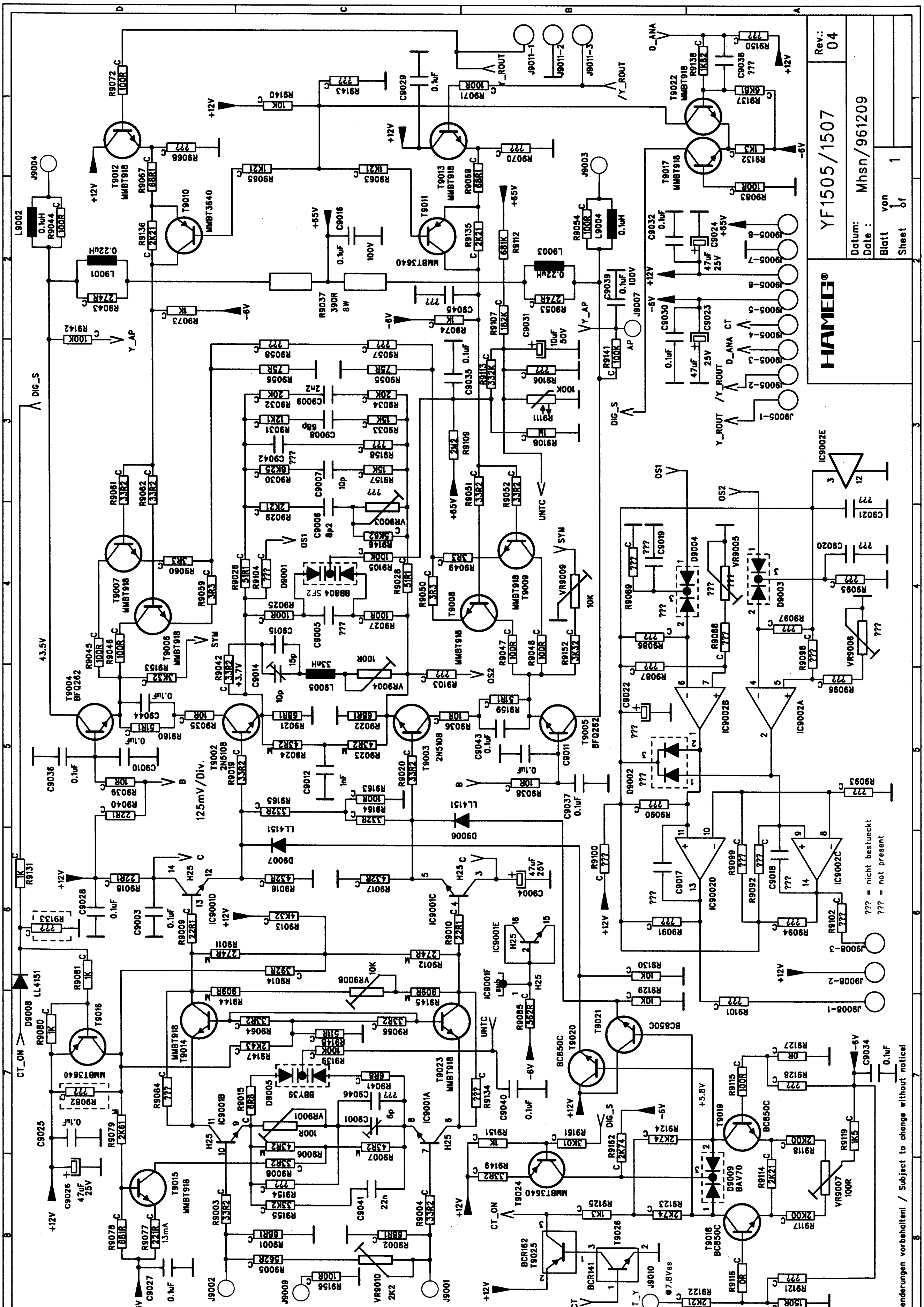
YF1505/1507
Rev.: 04
Datum: Date: Mhsn/961209
Blatt Sheet 1 von of 1
HAMEG
??? = nicht bestueckt
??? = not present
Änderungen vorbehalten! / Subject to change without notice!

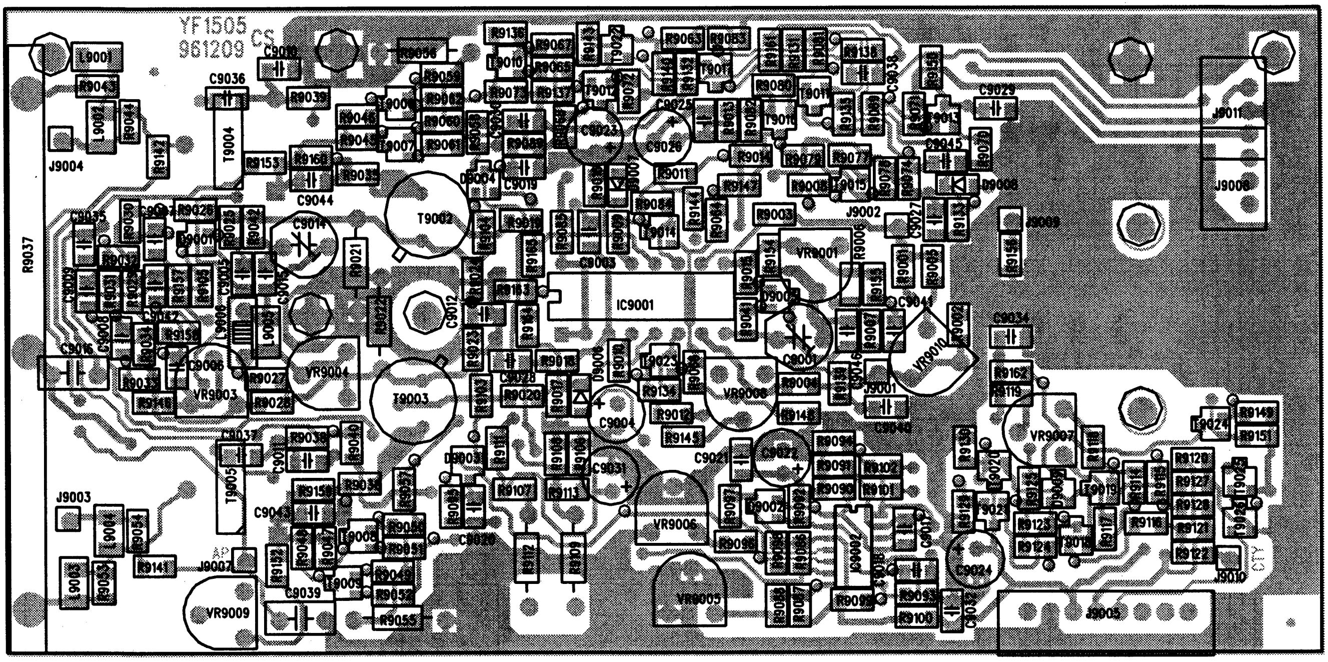

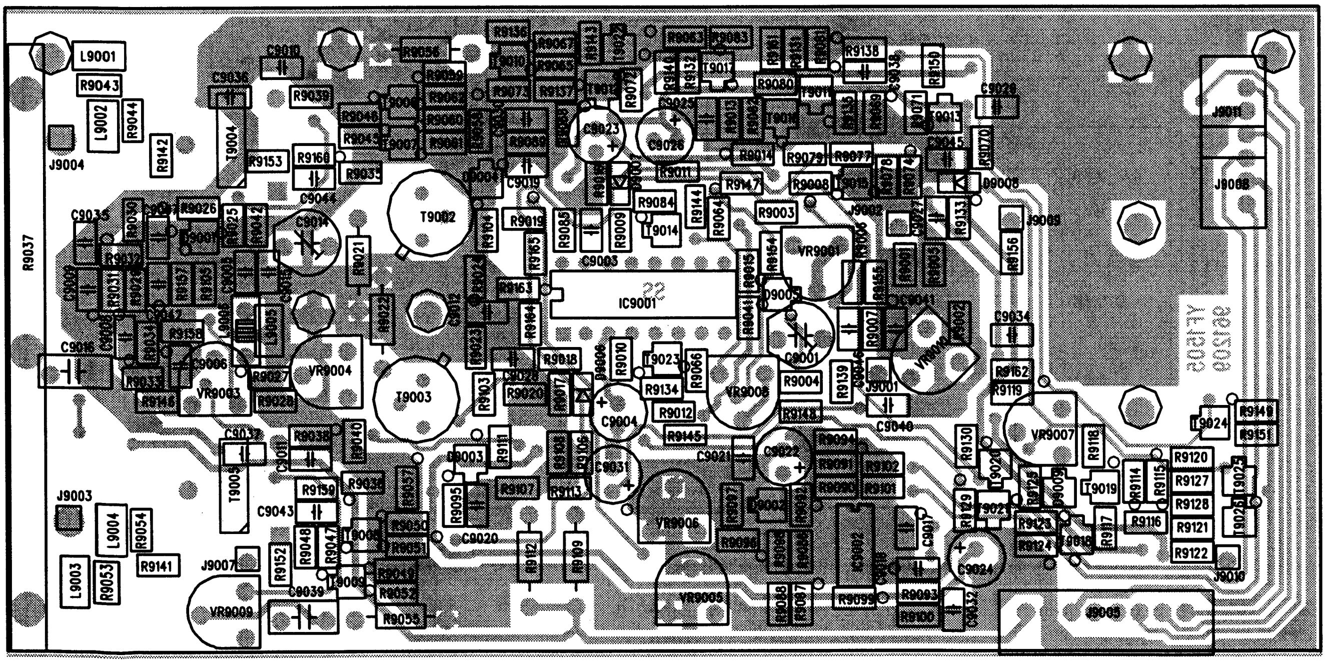

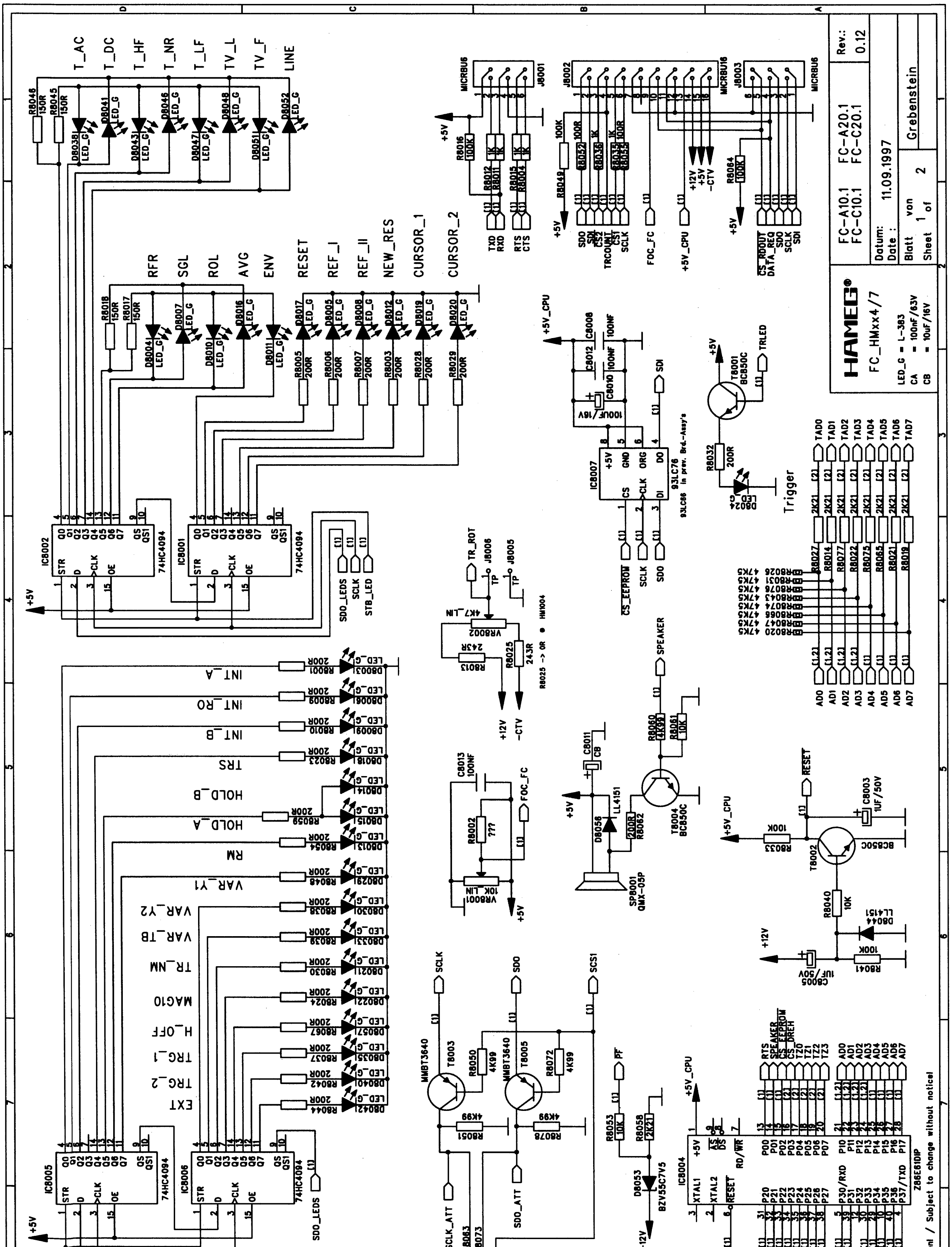
HAMEG®
FC_HMxx4/7
FC-A10.1 FC-A20.1
FC-C10.1 FC-C20.1
Datum: Date : 11.09.1997
Blatt 1 von 2
Sheet 1 of 2
Grebenstein
Rev.: 0.12
LED_G = L-383
CA = 100nF/63V
CB = 10uF/16V
Aenderungen vorbehalten! / Subject to change without notice!
Trigger
T_AC
T_DC
T_HF
T_NR
T_LF
TV_L
TV_F
LINE
RFR
SGL
ROL
AVG
ENV
RESET
REF_I
REF_II
NEW_RES
CURSOR_1
CURSOR_2
INT_A
INT_RO
INT_B
TRS
HOLD_B
HOLD_A
RM
VAR_Y1
VAR_Y2
VAR_TB
TR_NM
MAG10
H_OFF
TRG_1
TRG_2
EXT
Y_ATT

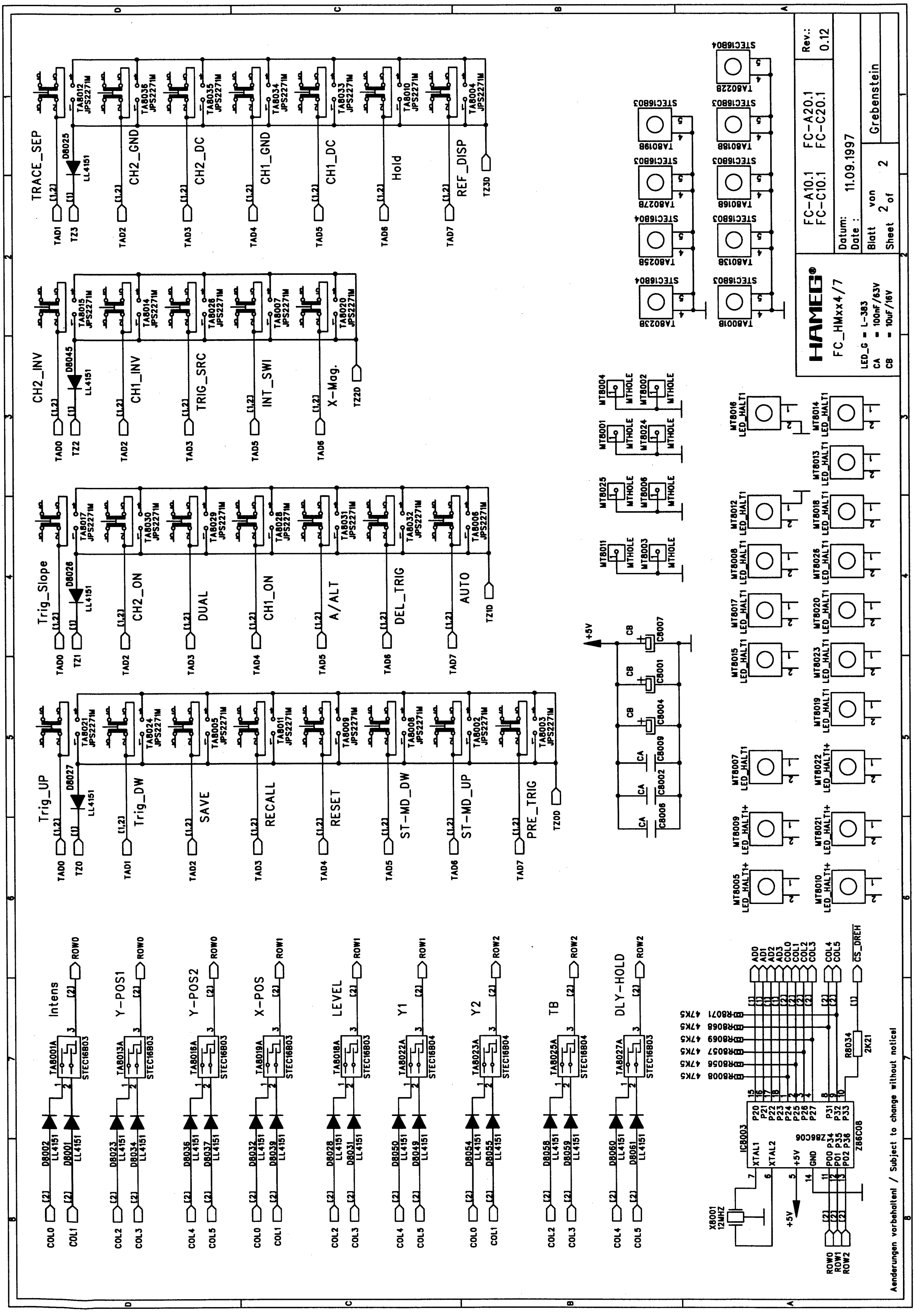

TRACE_SEP
CH2_GND
CH2_DC
CH1_GND
CH1_DC
Hold
REF_DISP
CH2_INV
CH1_INV
TRIG_SRC
INT_SWI
X-Mag.
Trig_Slope
CH2_ON
DUAL
CH1_ON
A/ALT
DEL_TRIG
AUTO
Trig_UP
Trig_DW
SAVE
RECALL
RESET
ST-MD_DW
ST-MD_UP
PRE_TRIG
Intens
Y-POS1
Y-POS2
X-POS
LEVEL
Y1
Y2
TB
DLY-HOLD
HAMEG®
FC_HMxx4/7
LED_G = L-383
CA = 100nF/63V
CB = 10uF/16V
FC-A10.1 FC-C10.1
FC-A20.1 FC-C20.1
Rev.: 0.12
Datum: Date : 11.09.1997
Blatt von Sheet 2 of 2
Grebenstein
Aenderungen vorbehalten! / Subject to change without notice!

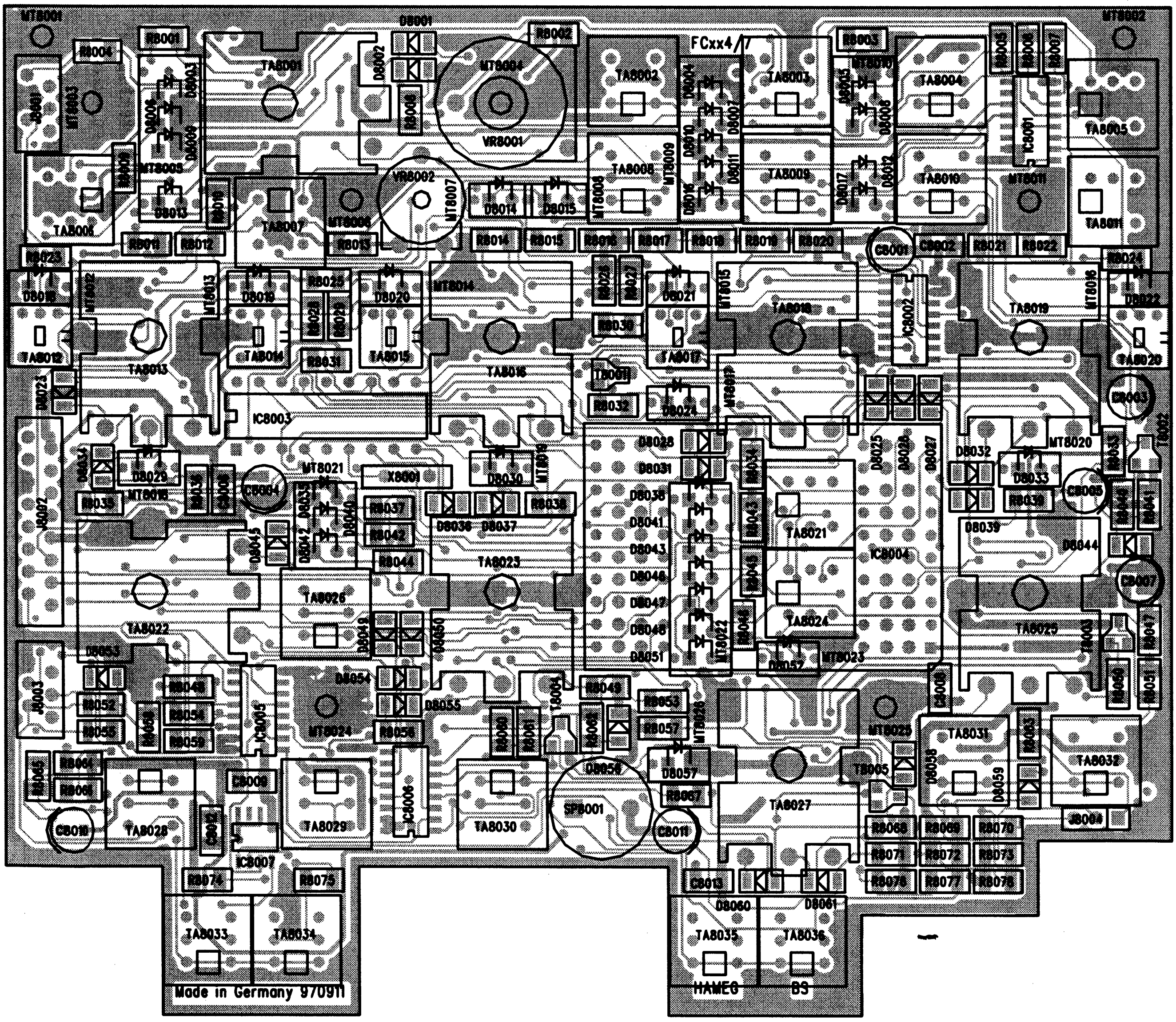

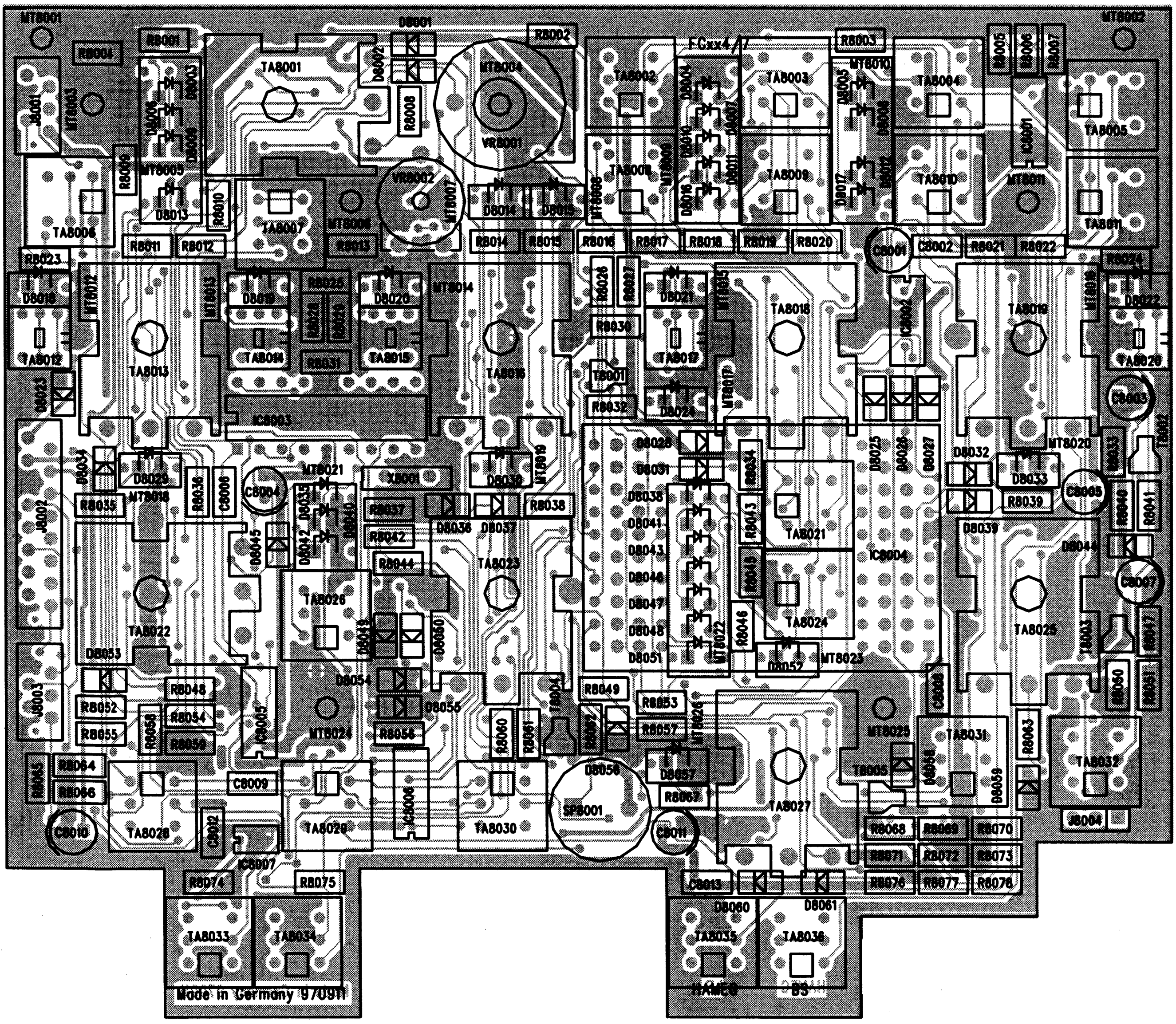

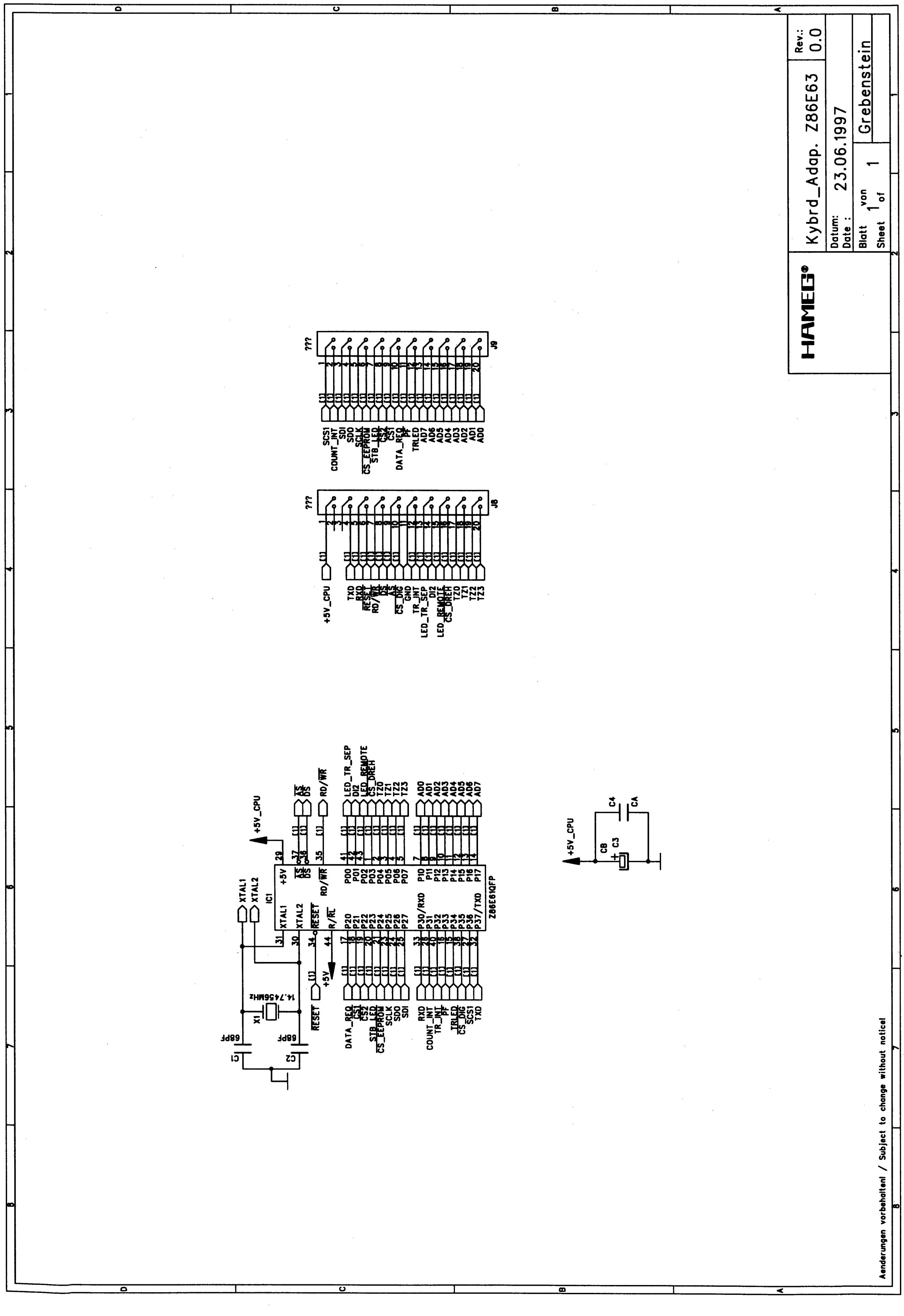
Kybrd_Adap. Z86E63
Rev.:
0.0
Datum:
Date :
23.06.1997
Blatt
Sheet
1 von of 1
Grebenstein
Z86E61QFP
IC1
J8
J9
+5V_CPU
14.7456MHz
68pF
Aenderungen vorbehalten! / Subject to change without notice!

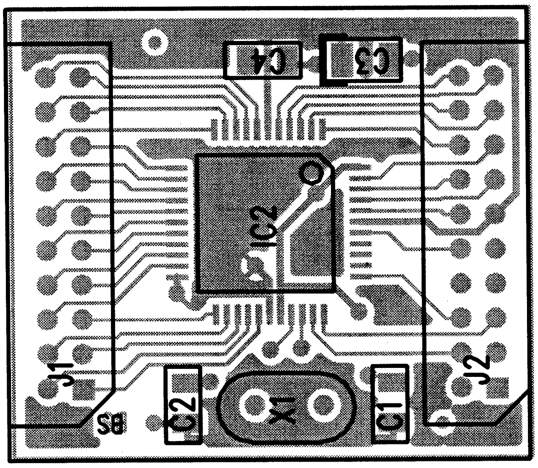

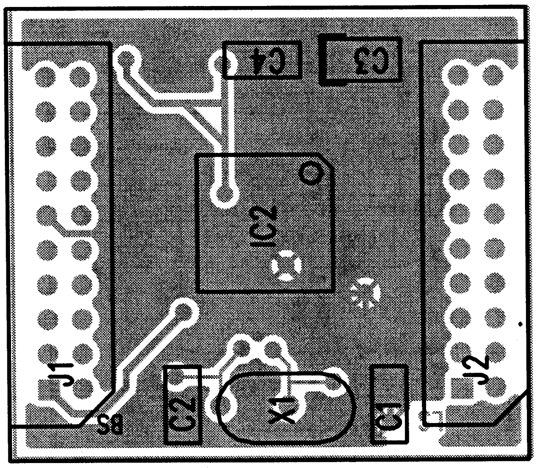

Subject to change without notice

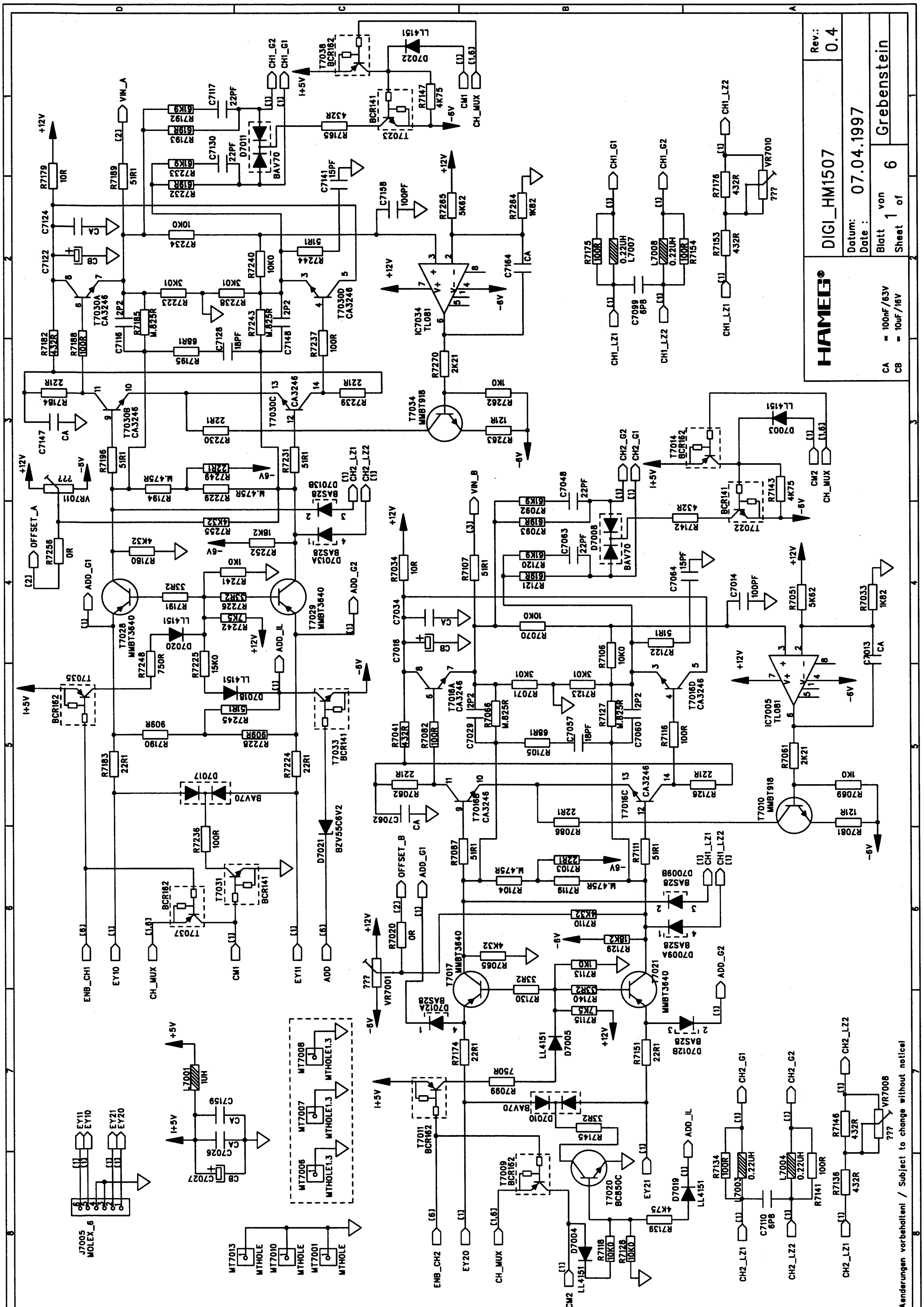
HAMEG®
DIGI_HM1507
Rev.: 0.4
Datum: Date: 07.04.1997
Blatt 1 von 6
Sheet of
Grebenstein
CA = 100nF/63V
CB = 10uF/16V
Änderungen vorbehalten! / Subject to change without notice!

Digital - Board Diagram

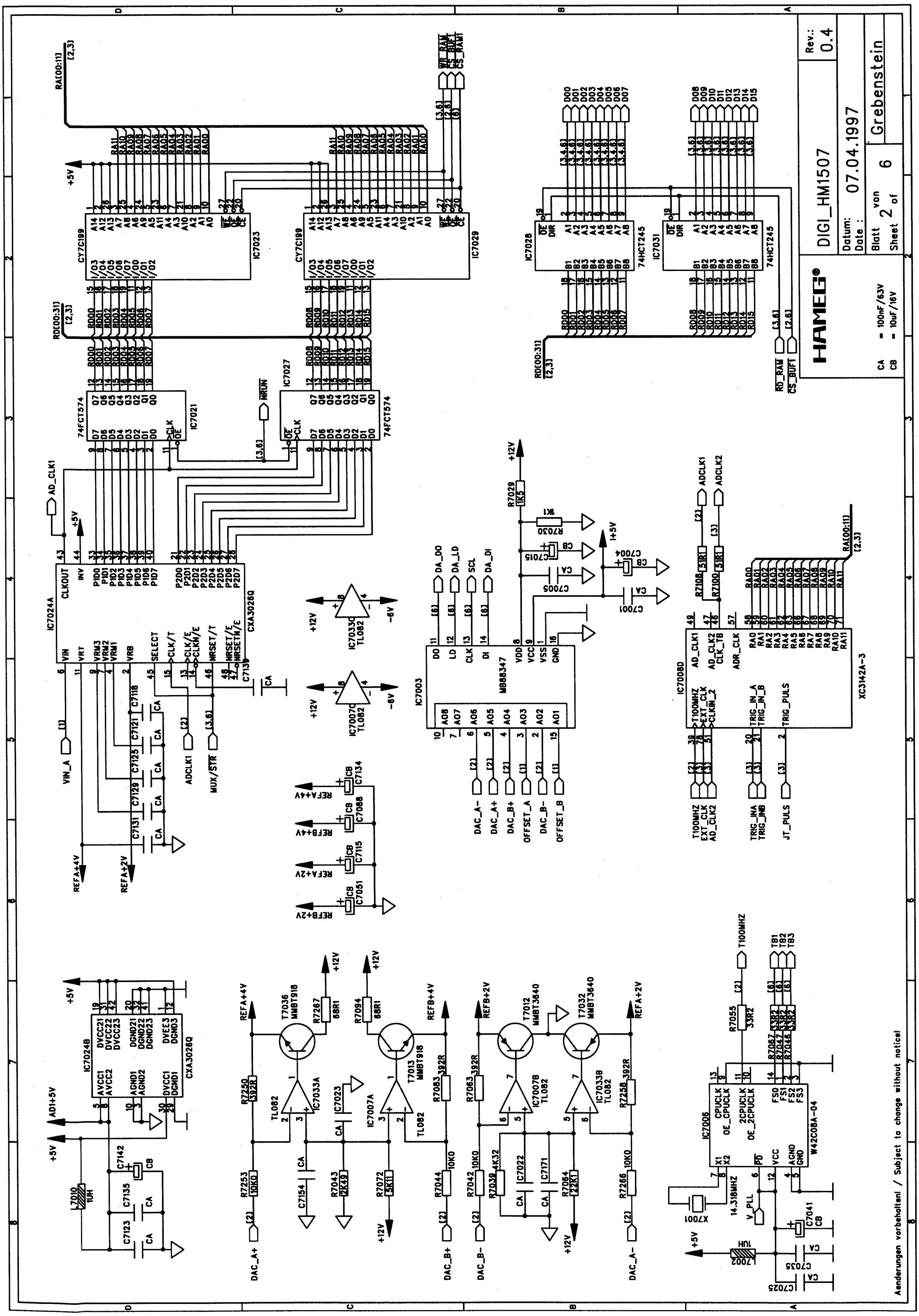

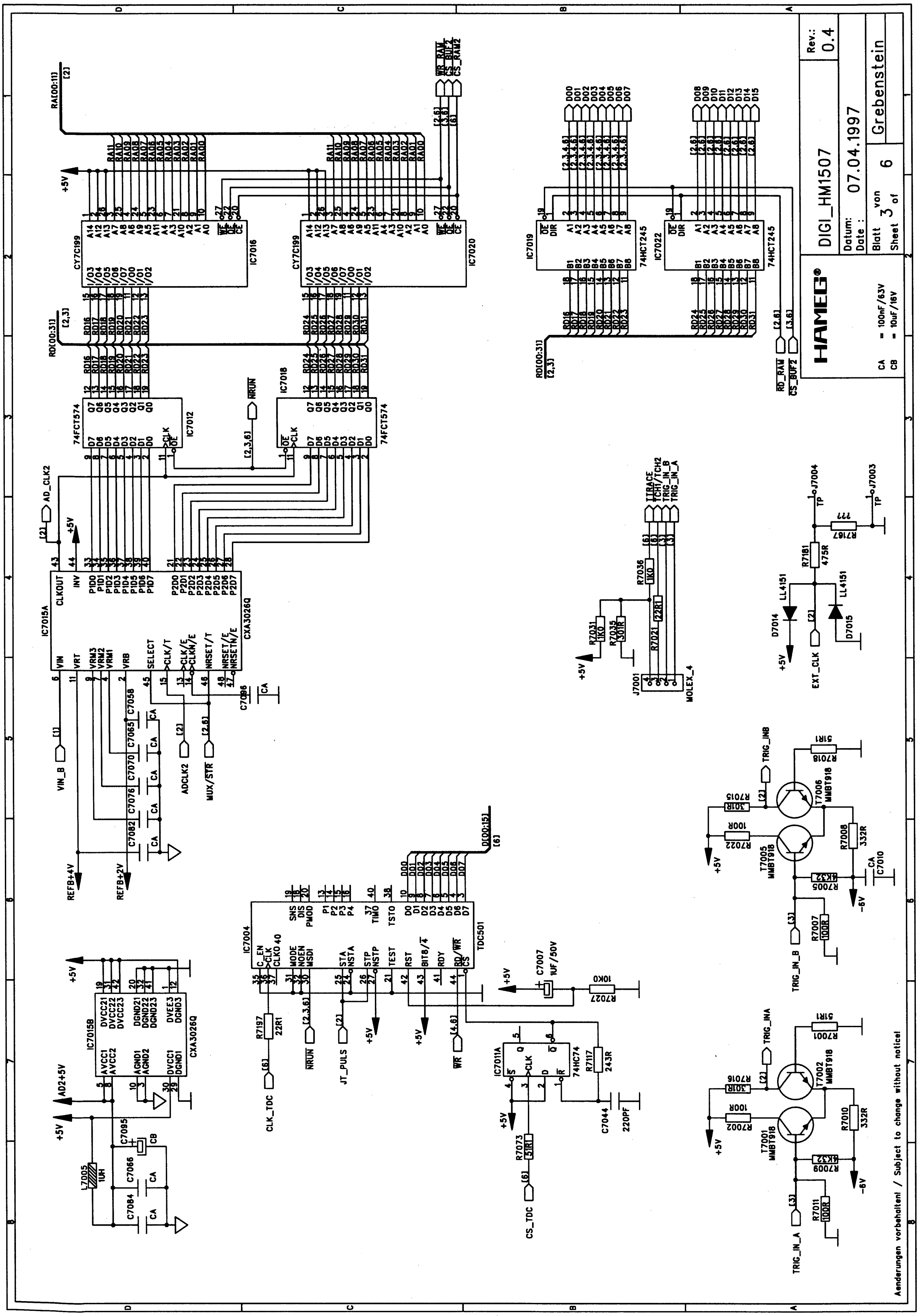
HAMEG
Rev.: 0.4
DIGI_HM1507
Datum: Date: 07.04.1997
Blatt Sheet 3 von of 6
Grebenstein
CA = 100nF/63V
CB = 10uF/16V
Aenderungen vorbehalten! / Subject to change without notice!

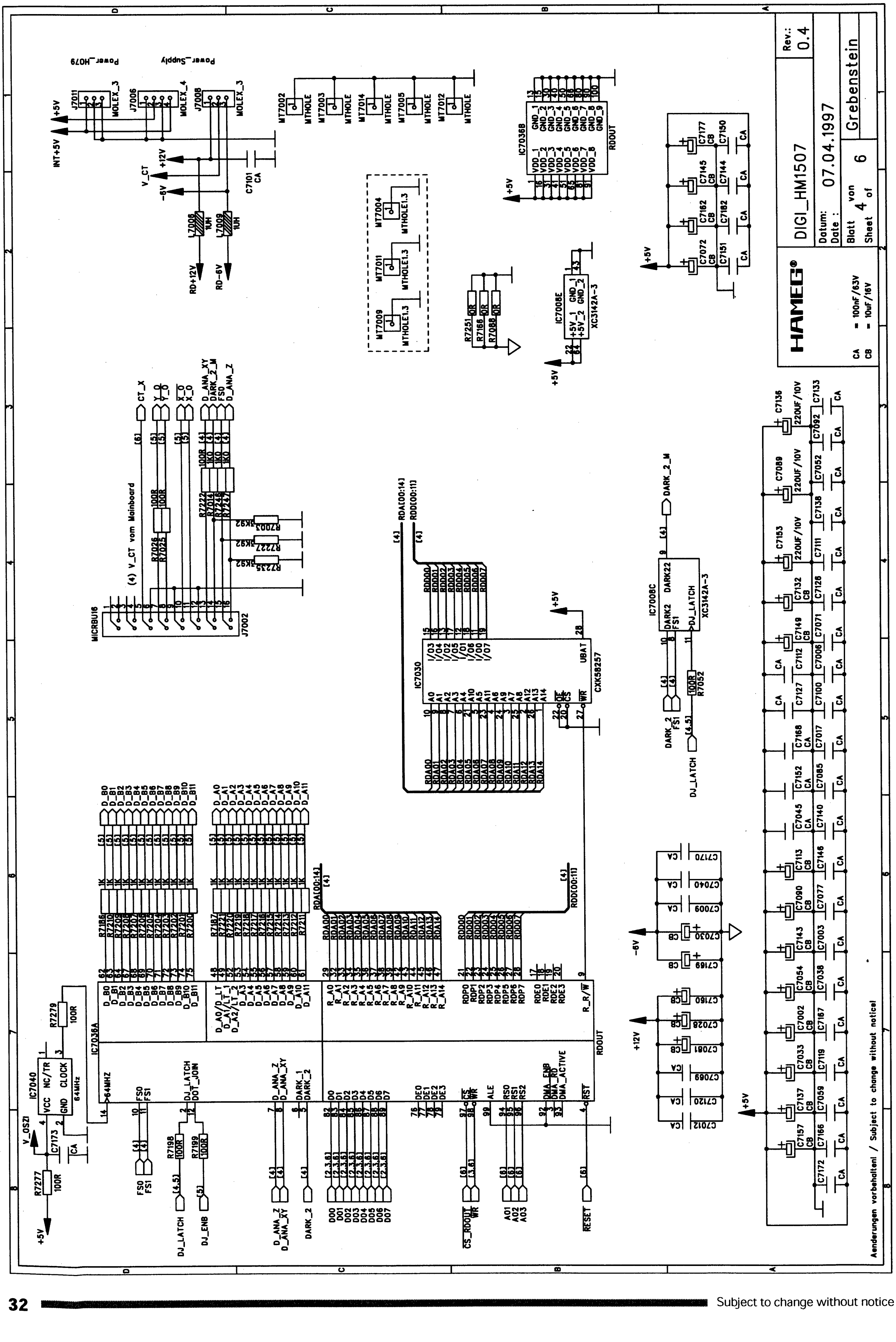
HAMEG
DIGI_HM1507
Rev.: 0.4
Datum: Date: 07.04.1997
Blatt Sheet 4 von of 6
Grebenstein
CA = 100nF/63V
CB = 10uF/16V
Aenderungen vorbehalten / Subject to change without notice

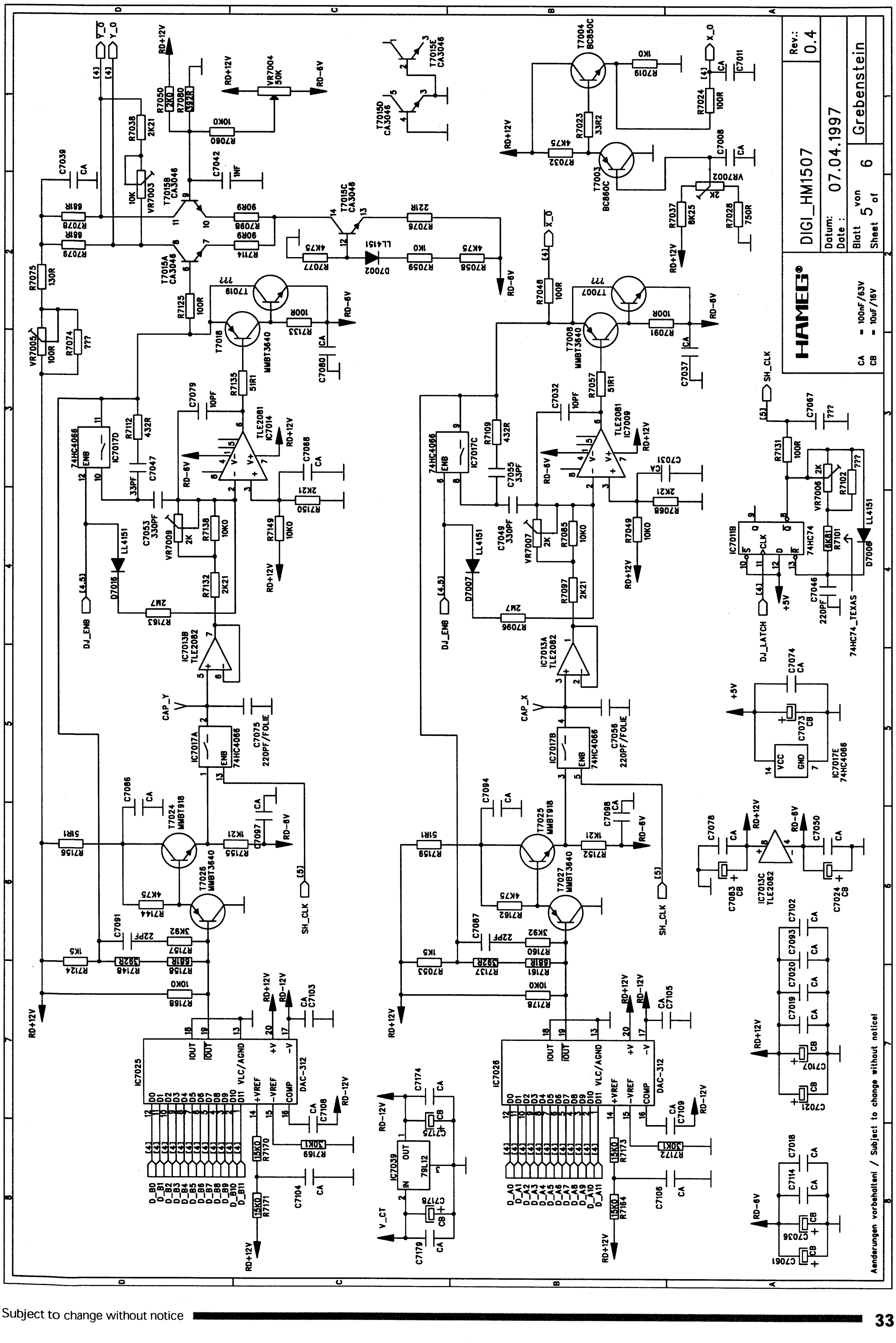
HAMEG
DIGI_HM1507
Rev.: 0.4
Datum: Date : 07.04.1997
Grebenstein
Blatt von Sheet of 5 6
CA = 100nF/63V
CB = 10uF/16V
Aenderungen vorbehalten! / Subject to change without notice!

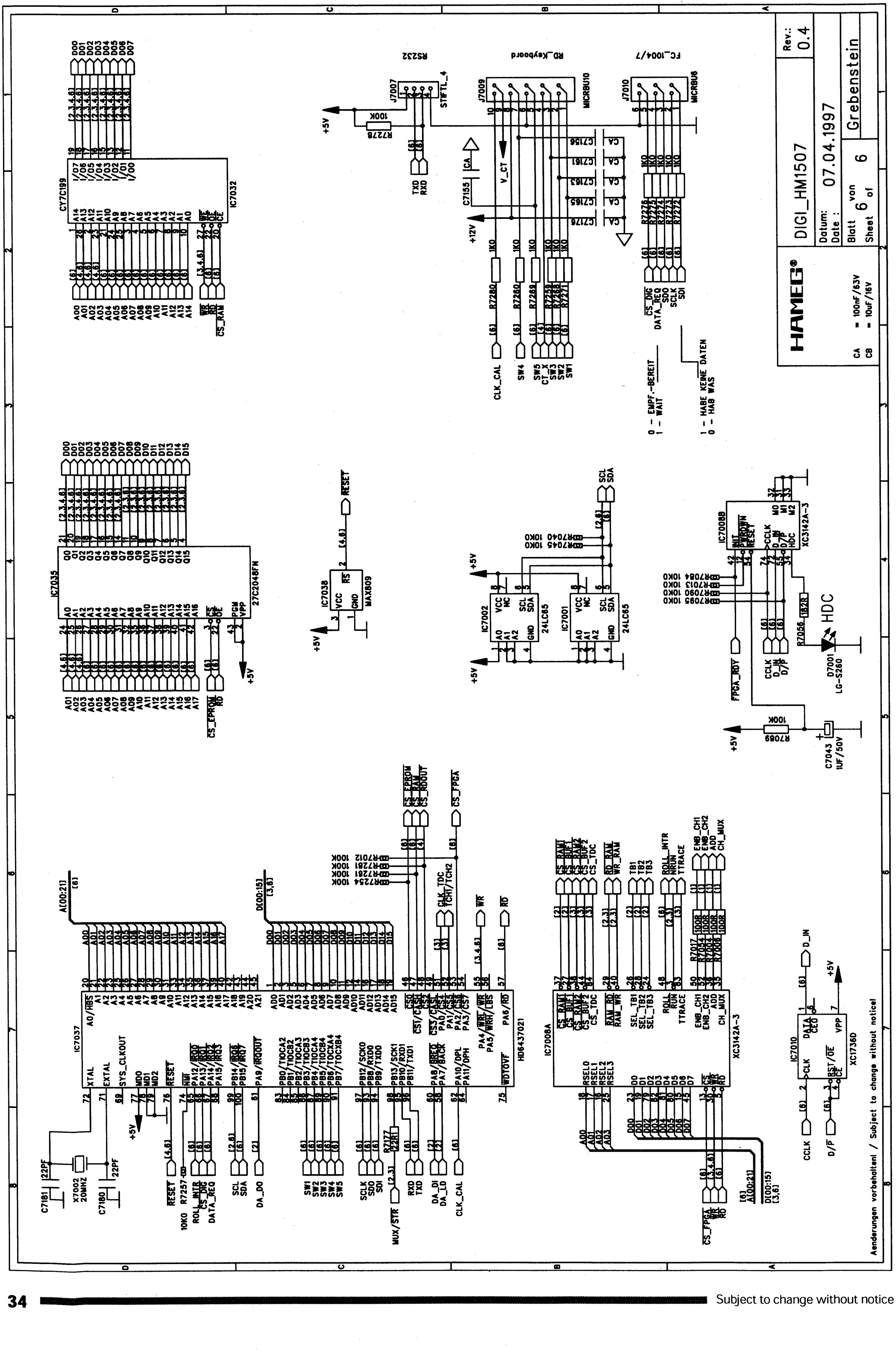
HAMEG
DIGI_HM1507
Rev.: 0.4
Datum: 07.04.1997
Grebenstein
Blatt 6 von 6
Aenderungen vorbehalten! / Subject to change without notice!

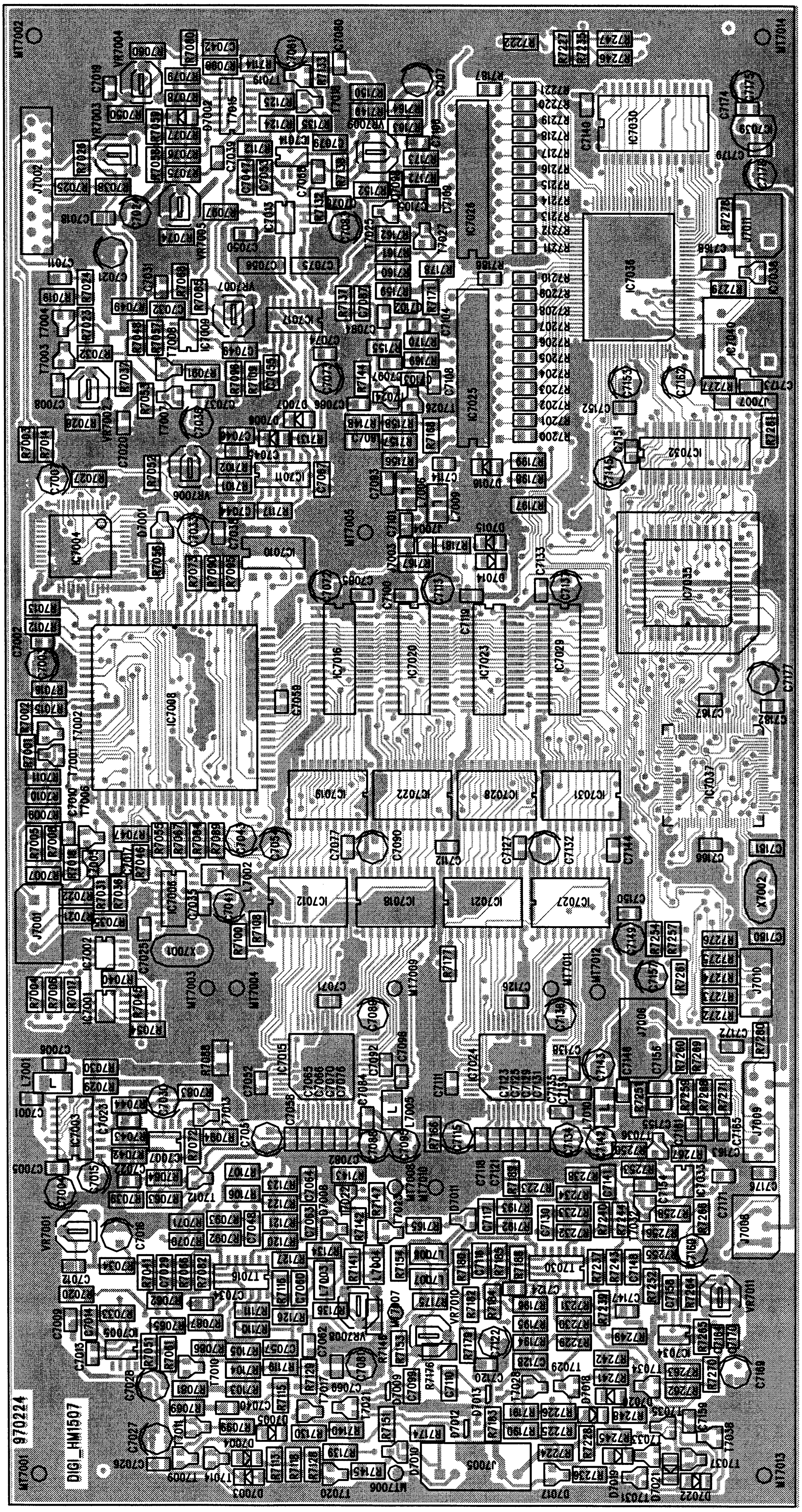

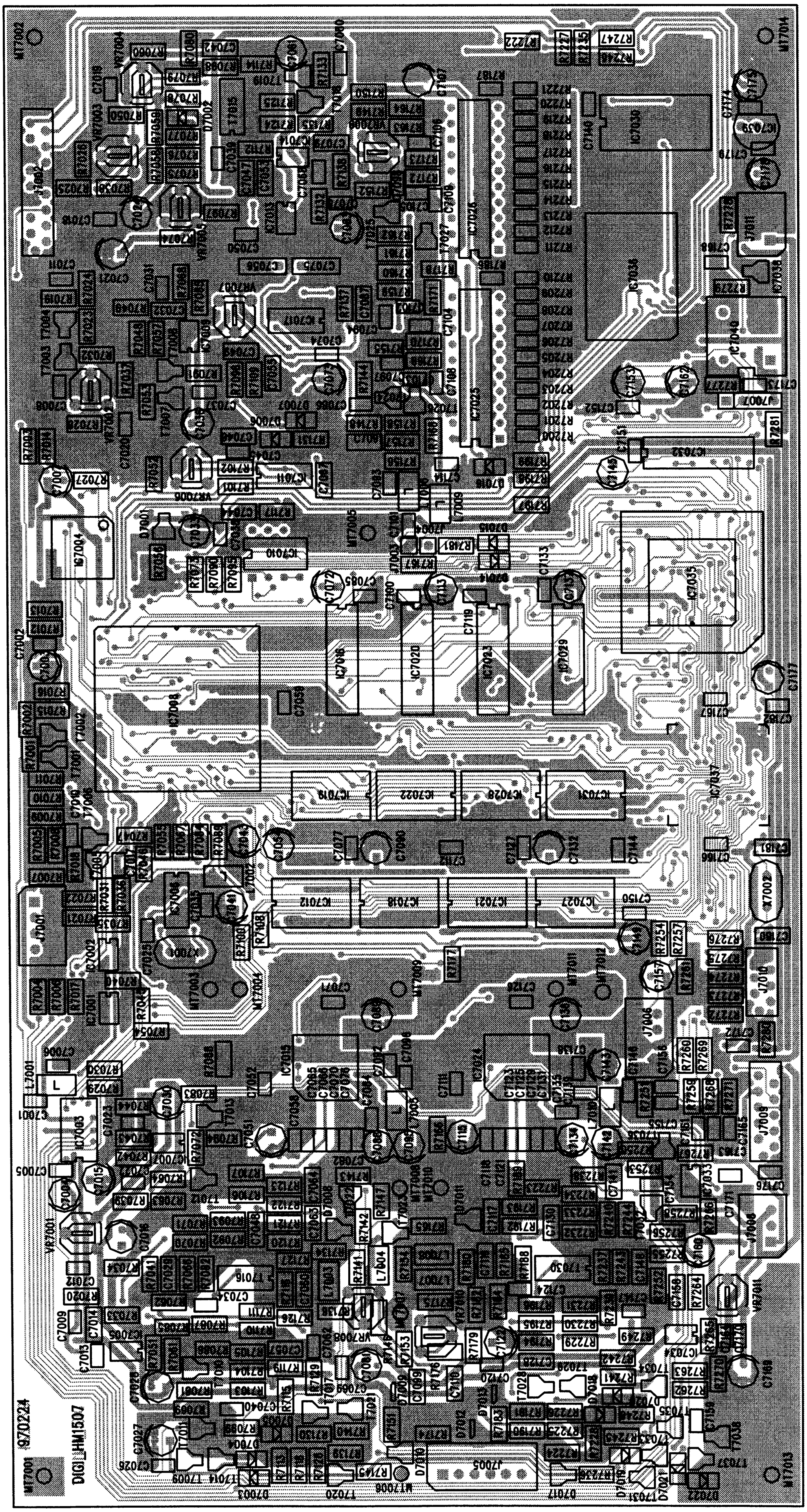

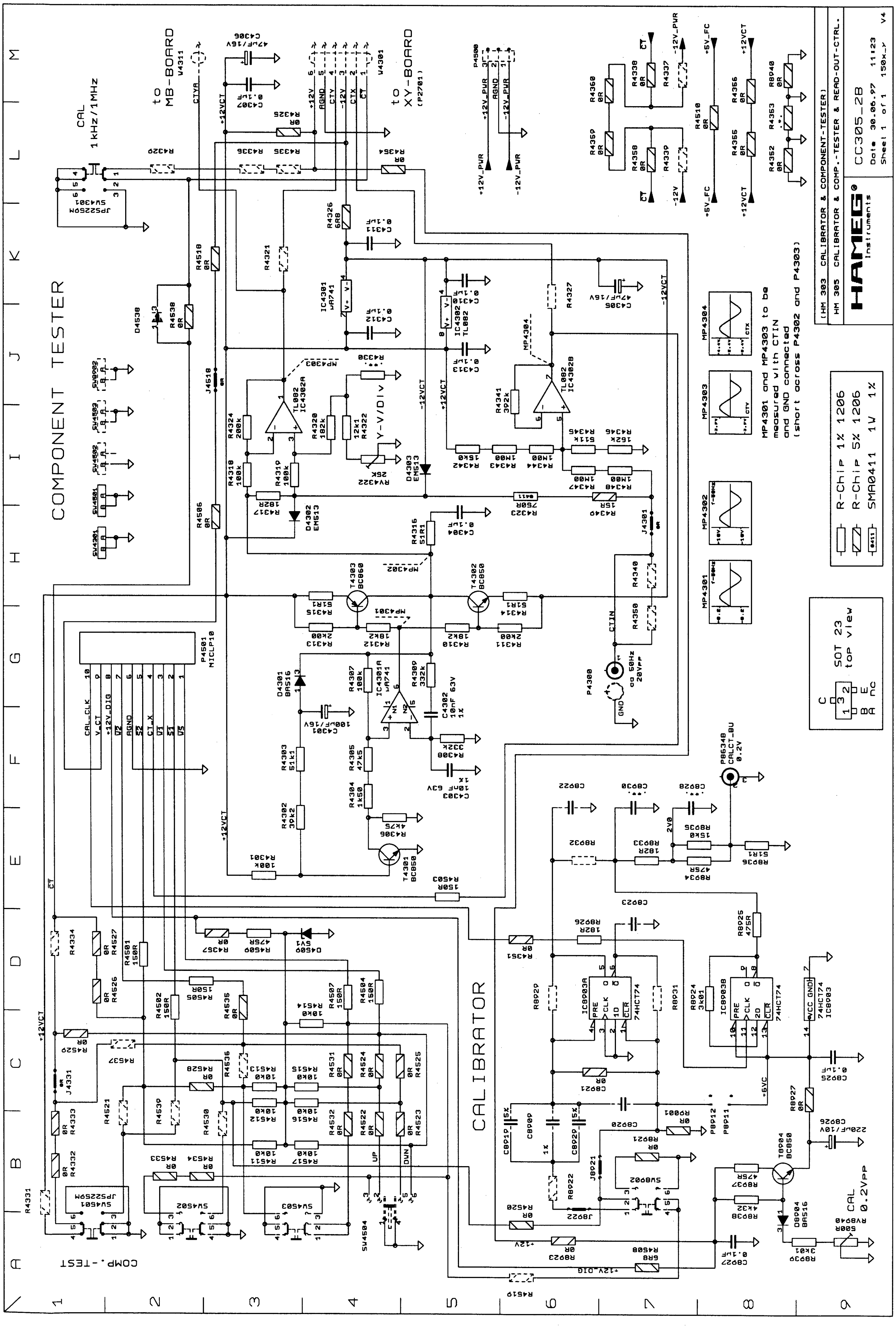
COMPONENT TESTER
CALIBRATOR
to MB-BOARD
to XY-BOARD
COMP.-TEST
(HM 303 CALIBRATOR & COMPONENT-TESTER)
HM 305 CALIBRATOR & COMP.-TESTER & READ-OUT-CTRL.
HAMEG Instruments
CC305_2B
SOT 23 top view
R-Chip 1% 1206
R-Chip 5% 1206
SMA0411 1W 1%

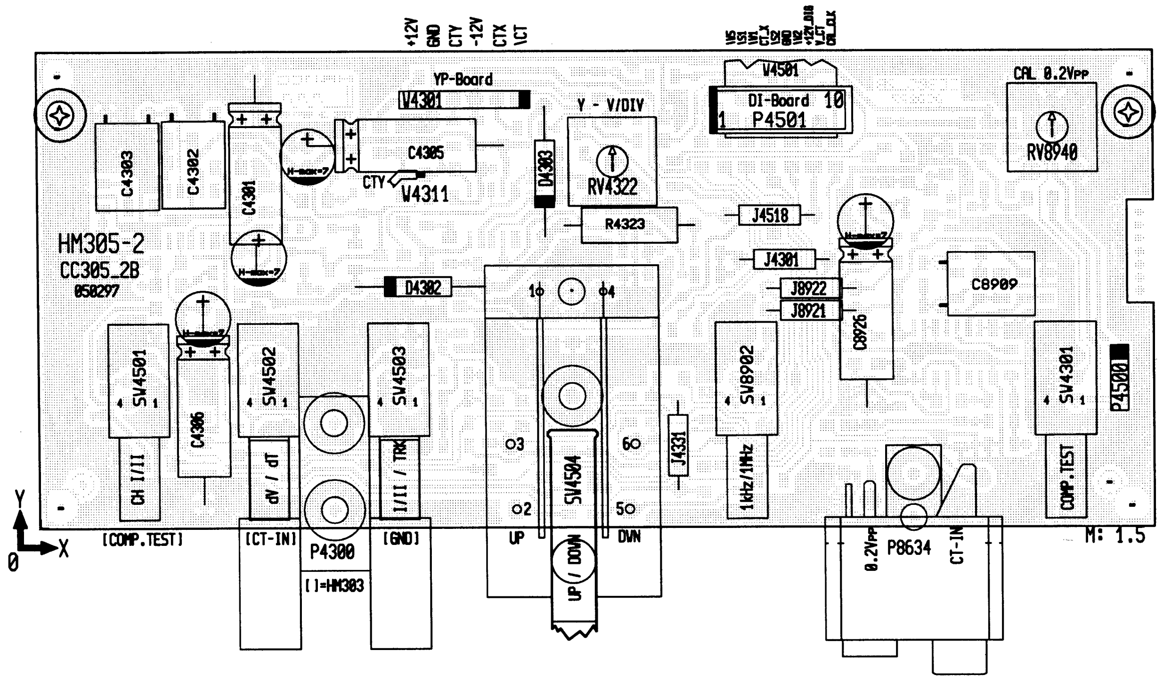

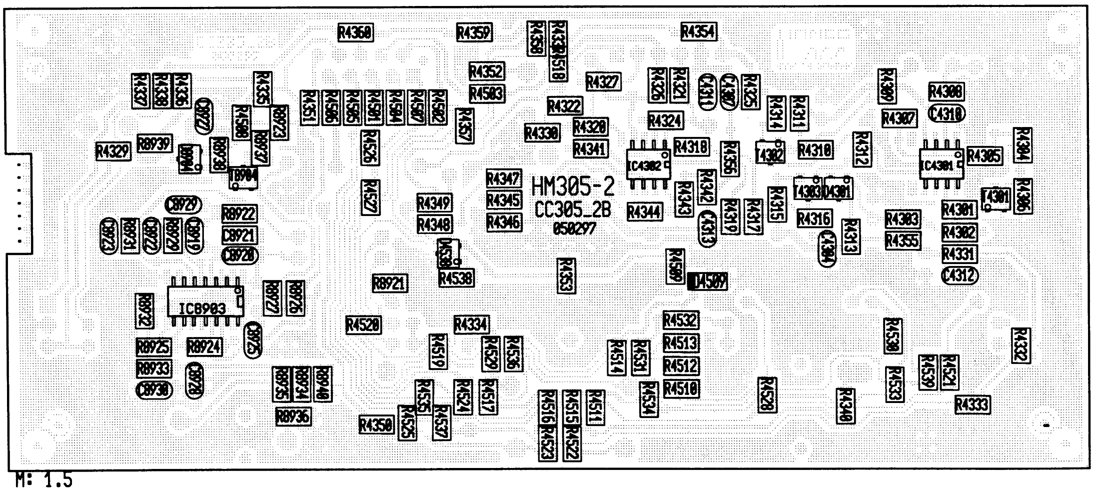

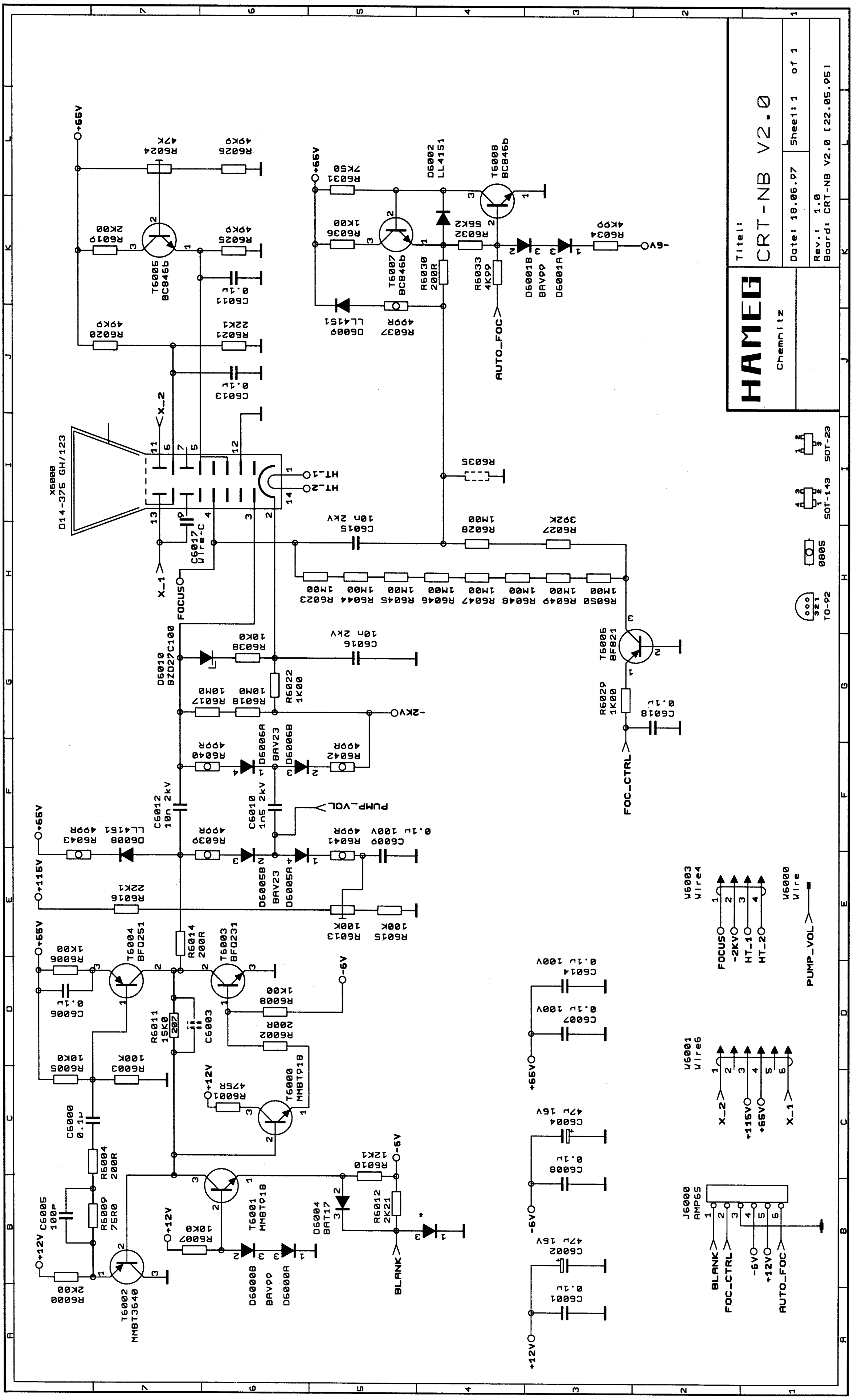
HAMEG
Chemnitz
Titel:
CRT-NB V2.0
Date: 18.06.97
Sheet: 1 of 1
Rev.: 1.0
Board: CRT-NB V2.0 [22.05.95]

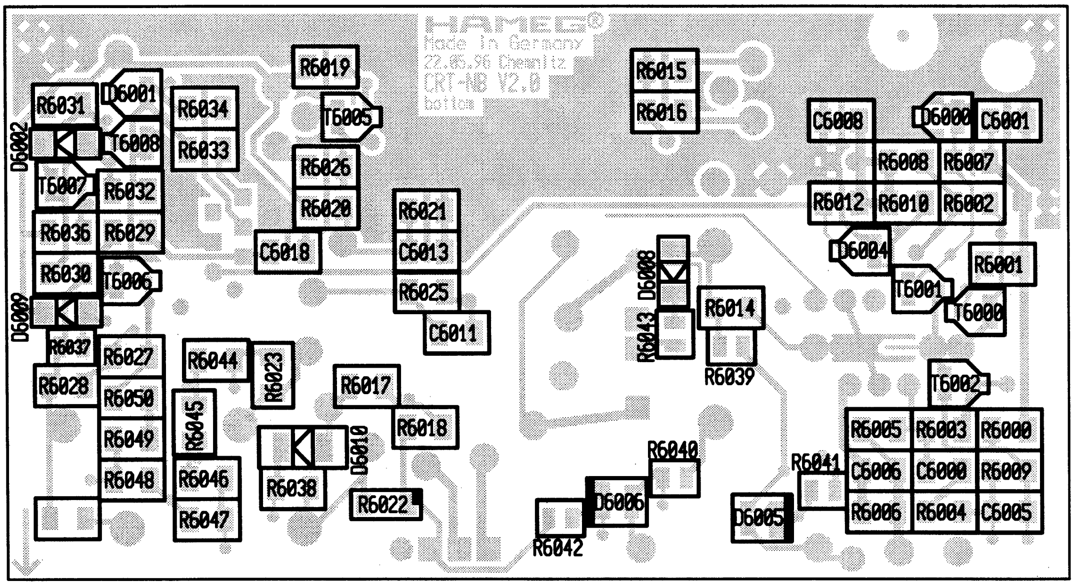

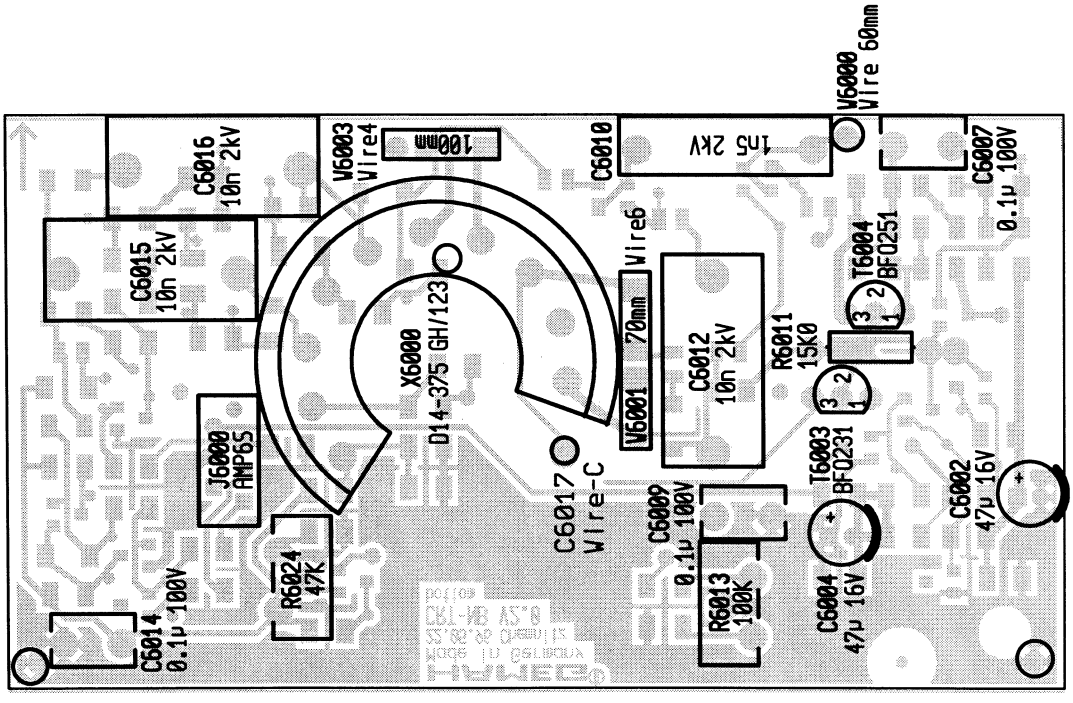

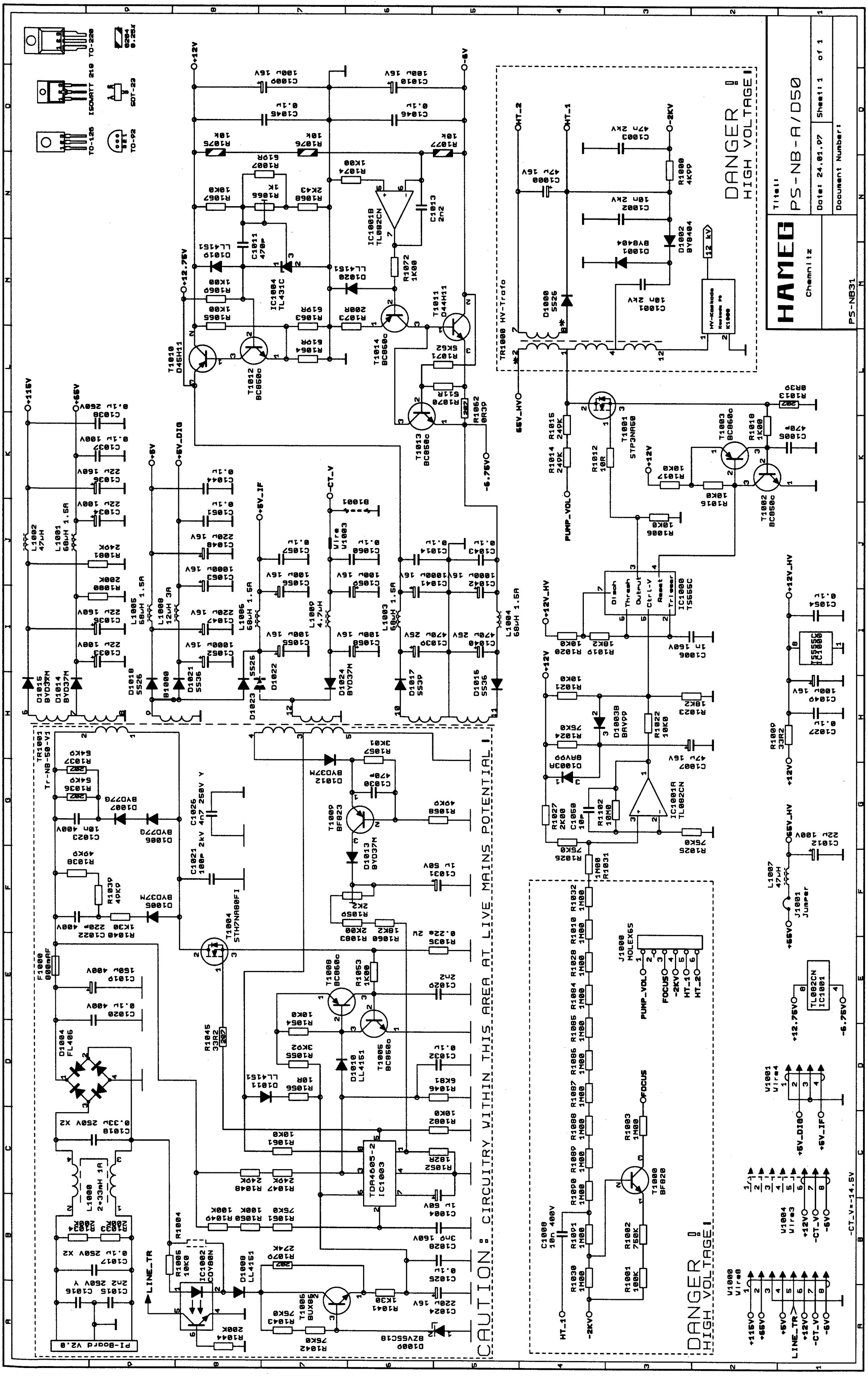
CAUTION: CIRCUITRY WITHIN THIS AREA AT LIVE MAINS POTENTIAL !
DANGER !
HIGH VOLTAGE !
HAMEG
Chemnitz
PS-NB-A/D50
PS-NB31

PS - Board Diagram

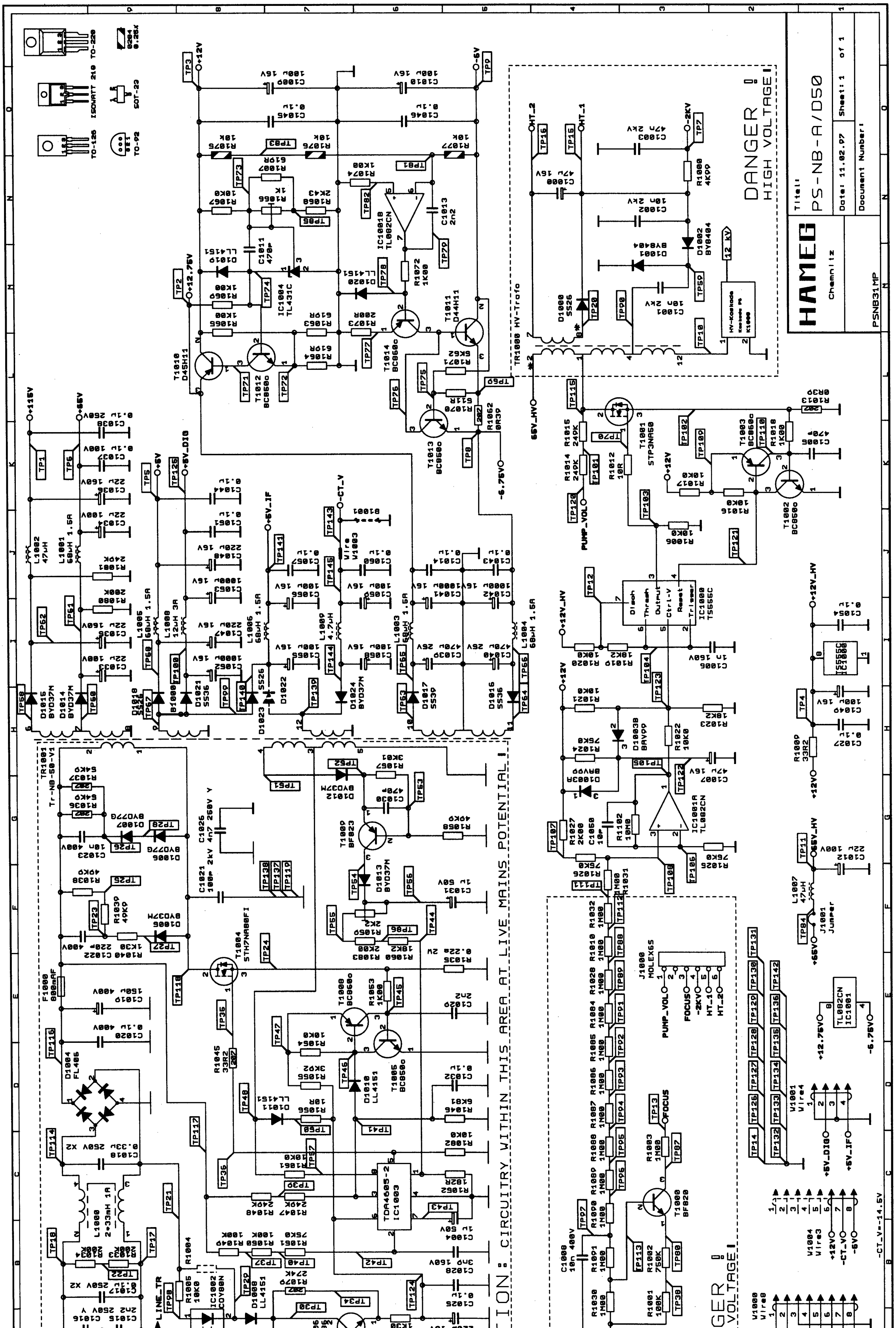

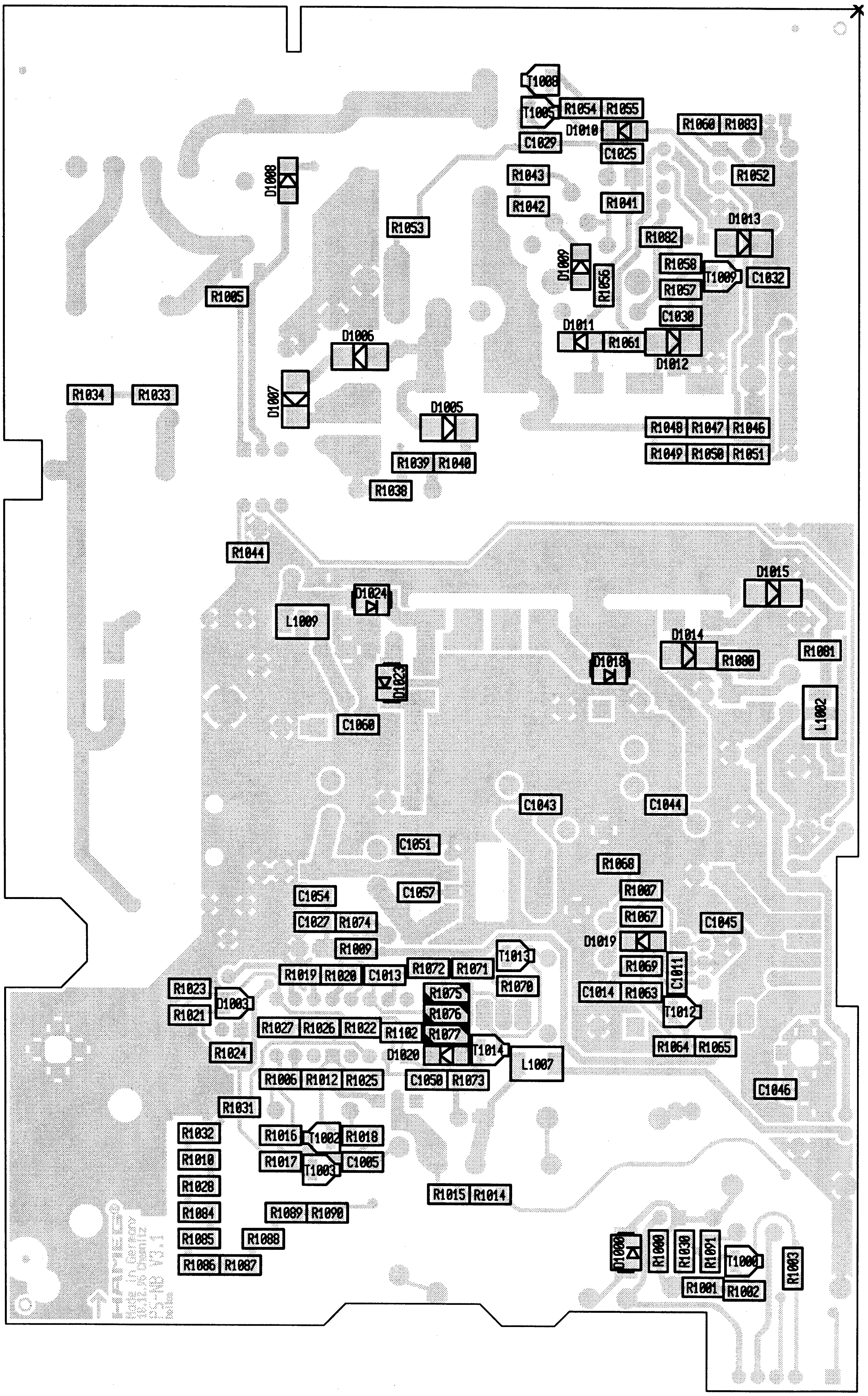

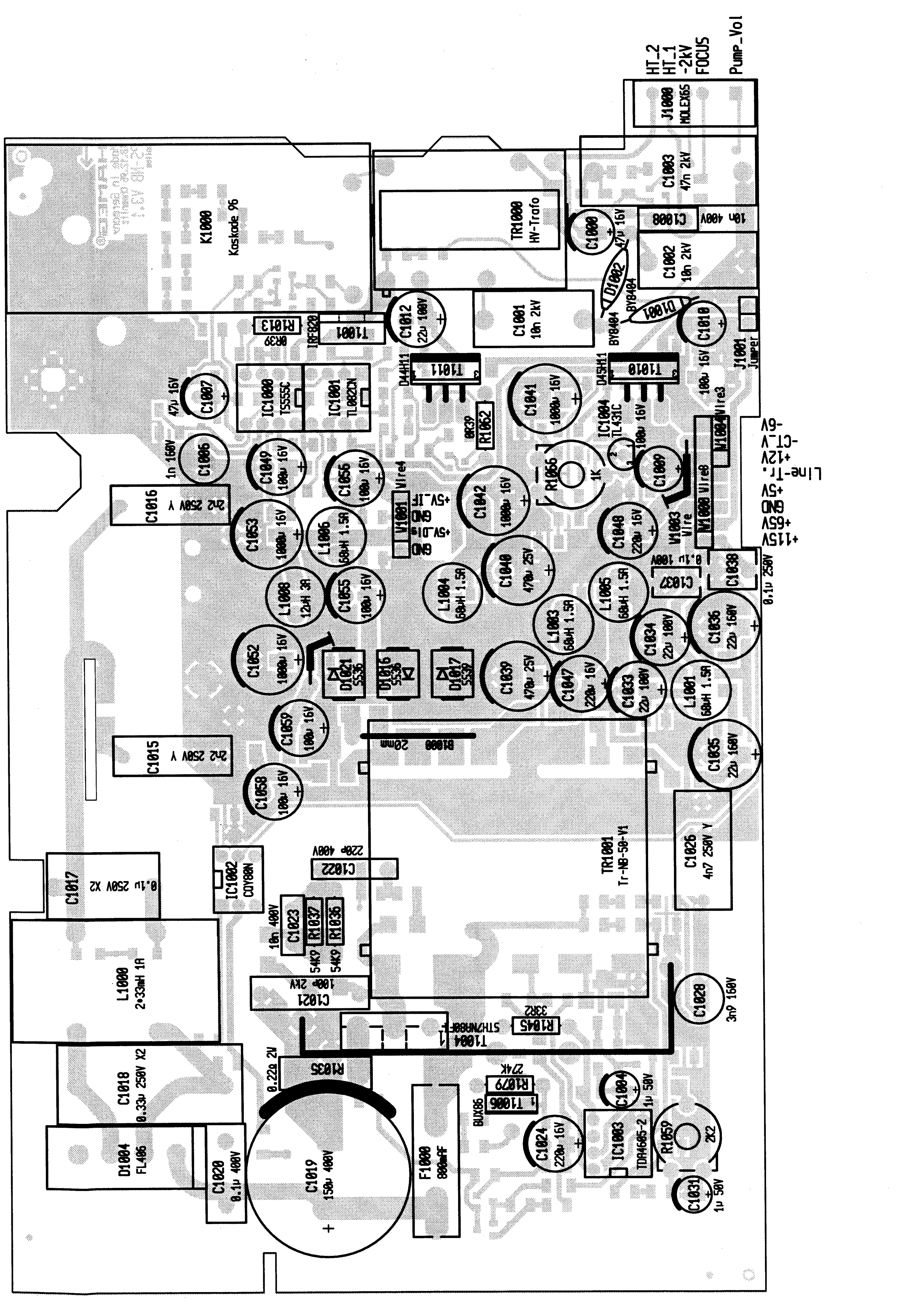
HT_2
HT_1
-2kV
FOCUS
Pump_Vol
-6V
-CT_V
+12V
Line-Tr.
+5V
GND
+65V
+115V

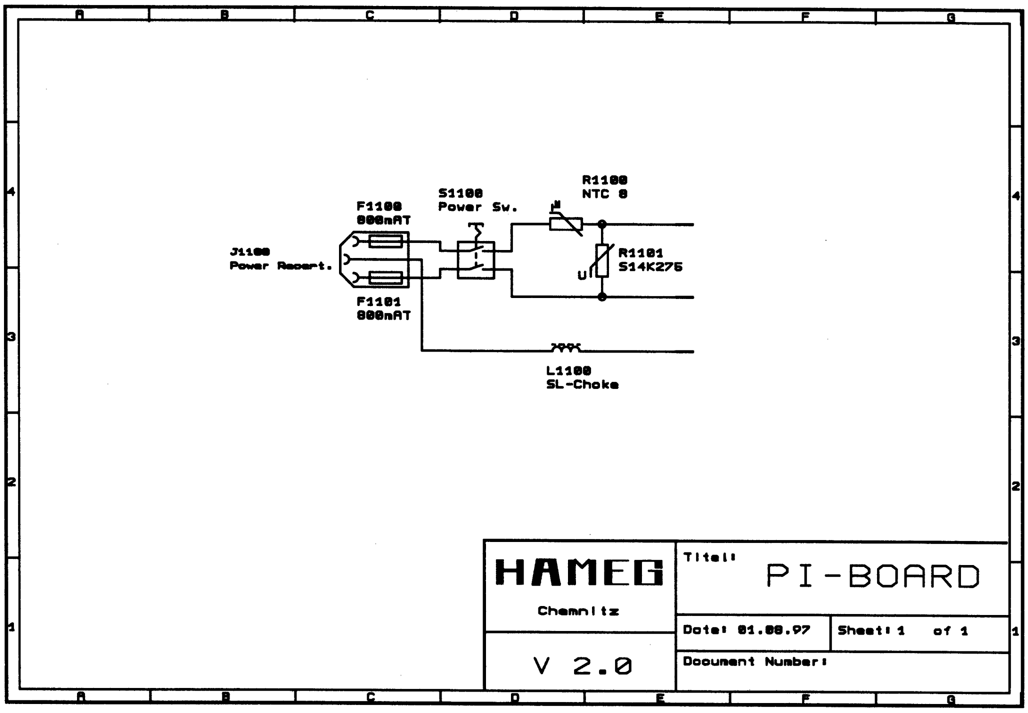
R1100
NTC 8
S1100
Power Sw.
F1100
800mAT
J1100
Power Recept.
R1101
S14K275
F1101
800mAT
L1100
SL-Choke
HAMEG
Chemnitz
Titel:
PI-BOARD
Date: 01.08.97
Sheet: 1 of 1
V 2.0
Document Number:

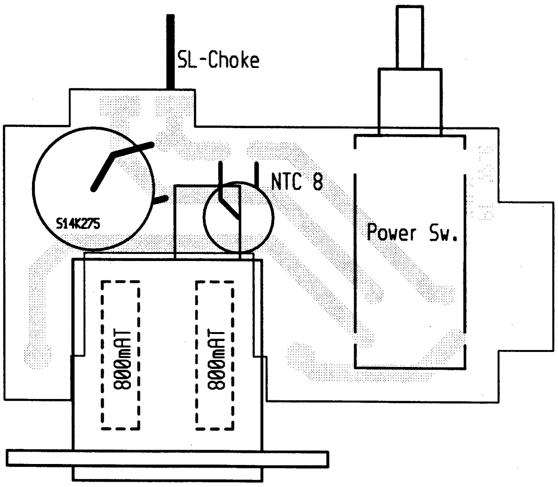
SL-Choke
NTC 8
S14K275
Power Sw.
800mAT
800mAT
Power Recept.

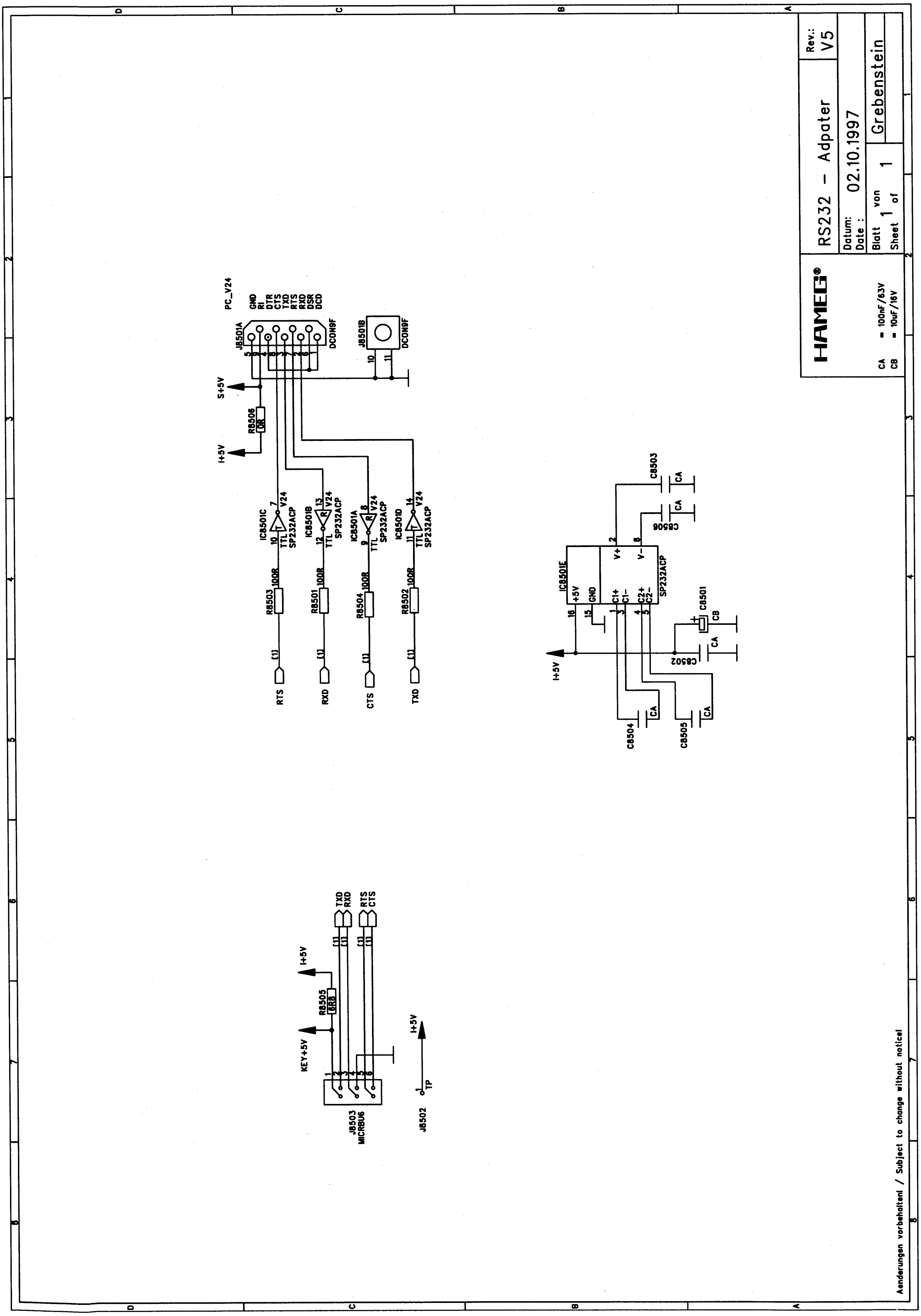
RS232 - Adpater
Rev.: V5
Datum: Date : 02.10.1997
Blatt 1 von 1
Sheet 1 of 1
Grebenstein
HAMEG®
CA = 100nF/63V
CB = 10uF/16V
PC_V24
GND RI DTR CTS TXD RTS RXD DSR DCD
J8501A DCON9F
J8501B DCON9F
S+5V
I+5V
R8506 0R
IC8501C
IC8501B
IC8501A
IC8501D
SP232ACP
V24
TTL
R8503 100R
R8501 100R
R8504 100R
R8502 100R
RTS
RXD
CTS
TXD
IC8501E
C8501
C8502
C8503
C8504
C8505
C8506
R8505 6R8
KEY+5V
J8503 MICRBU6
J8502
TP
Aenderungen vorbehalten! / Subject to change without notice!

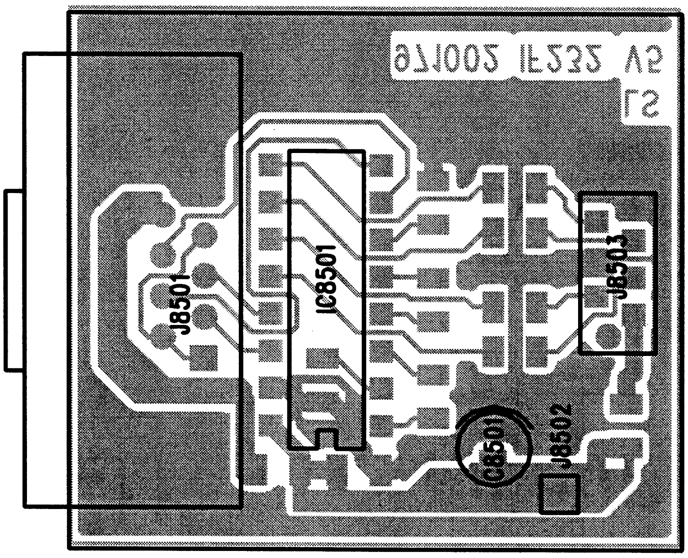
J8501
IC8501
J8503
C8501
J8502

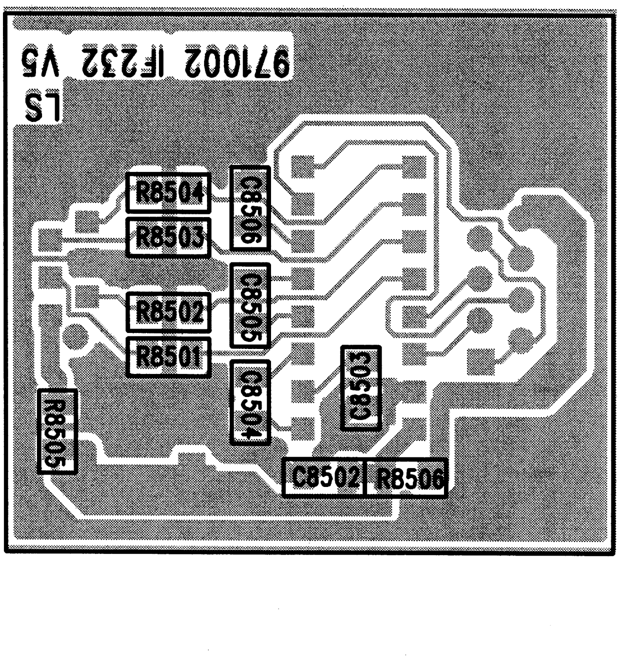
971002 IF232 V5
R8504
R8503
R8502
R8501
R8505
C8506
C8505
C8504
C8503
C8502
R8506

Appendix /Anhang

Technical changes (Upgrade)

Calibrator and Component tester board
Diagram 50
Top and bottom side 51

Digital board
Diagram 52
SMD (bottom) side... 53-54

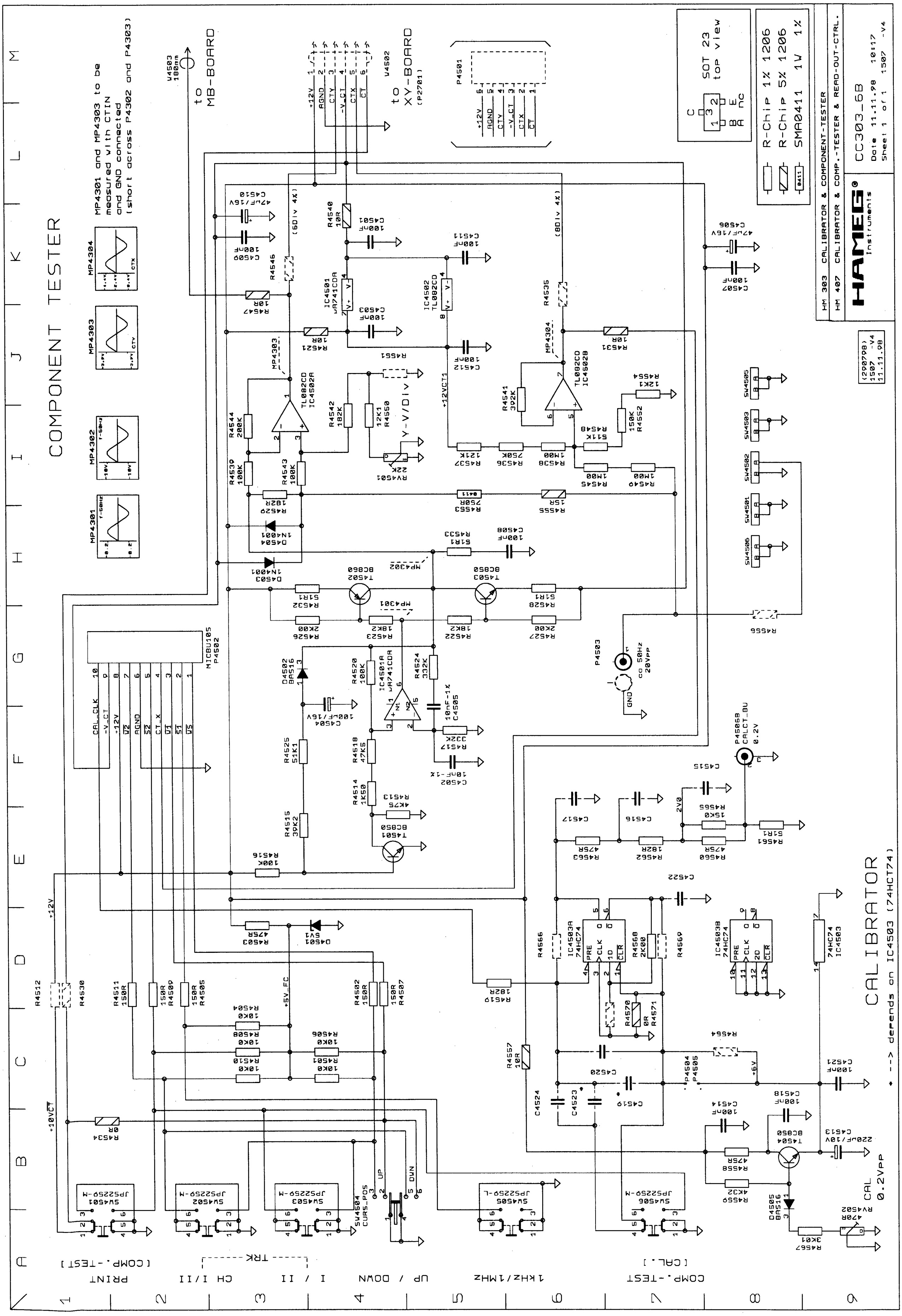
COMPONENT TESTER
CALIBRATOR
to MB-BOARD
to XY-BOARD
HAMEG Instruments
CC303_6B

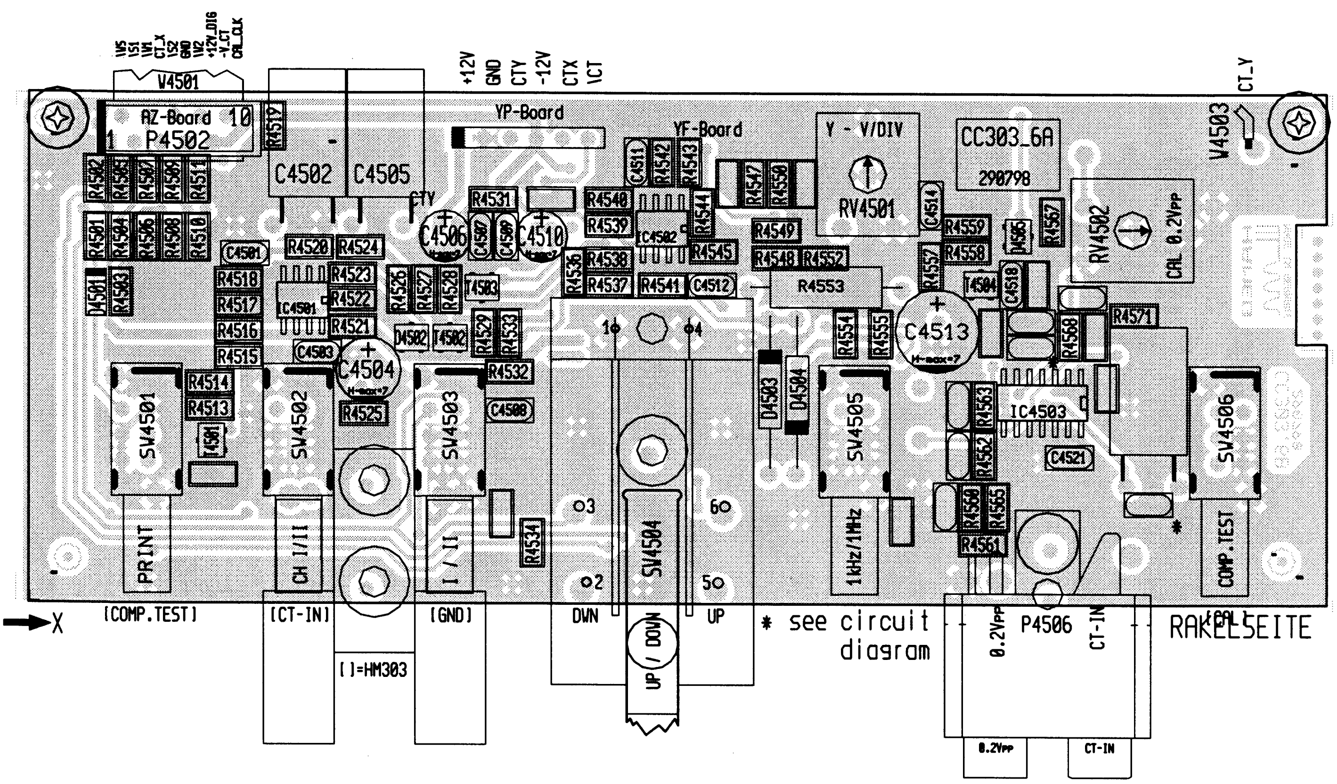

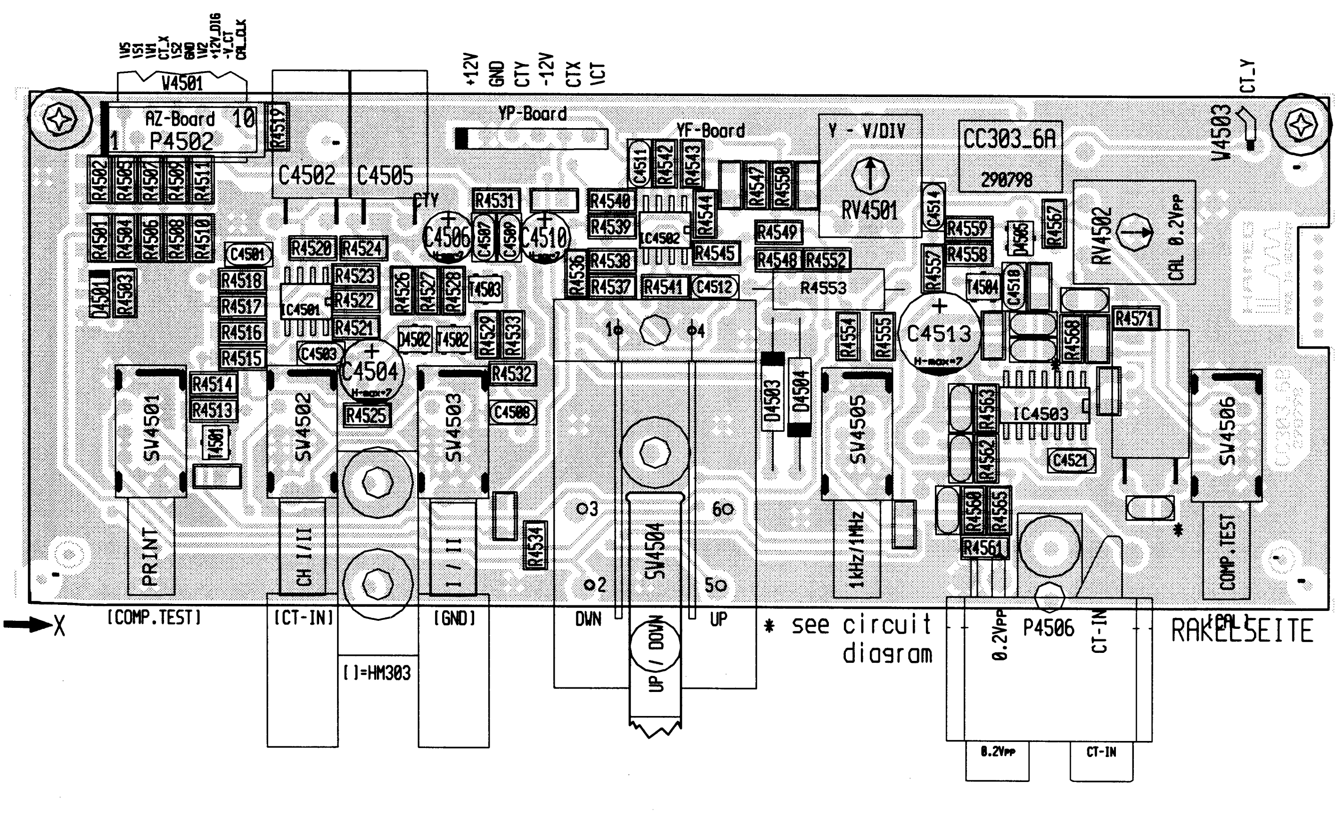

R7243 changed form **825Ω** to **866Ω**

R7185 changed form **825Ω** to **866Ω**

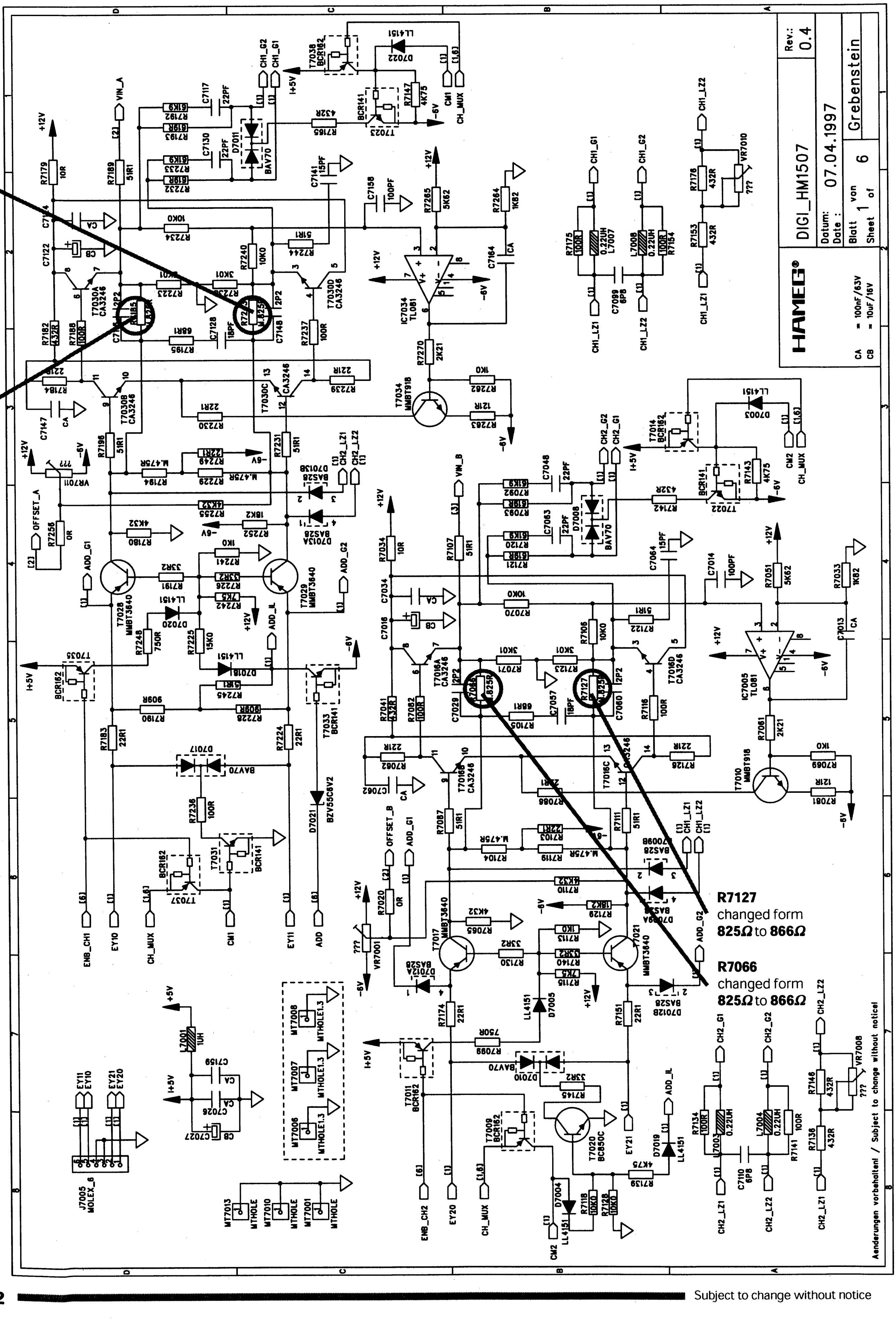

R7127 changed form **825Ω** to **866Ω**

R7066 changed form **825Ω** to **866Ω**

R7127
changed form
825Ω to **866Ω**

R7066
changed form
825Ω to **866Ω**

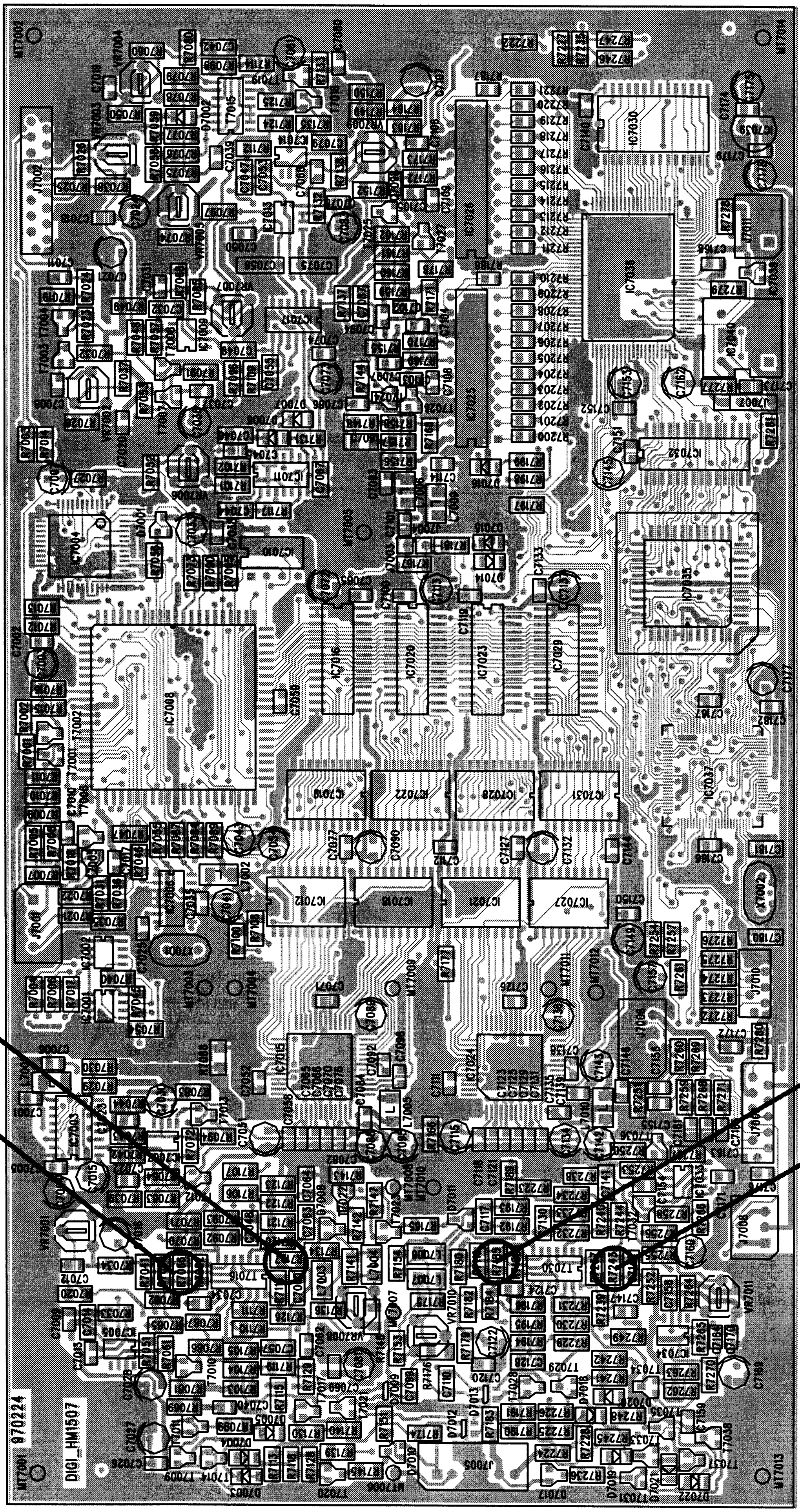

R7185
changed form
825Ω to **866Ω**

R7243
changed form
825Ω to **866Ω**

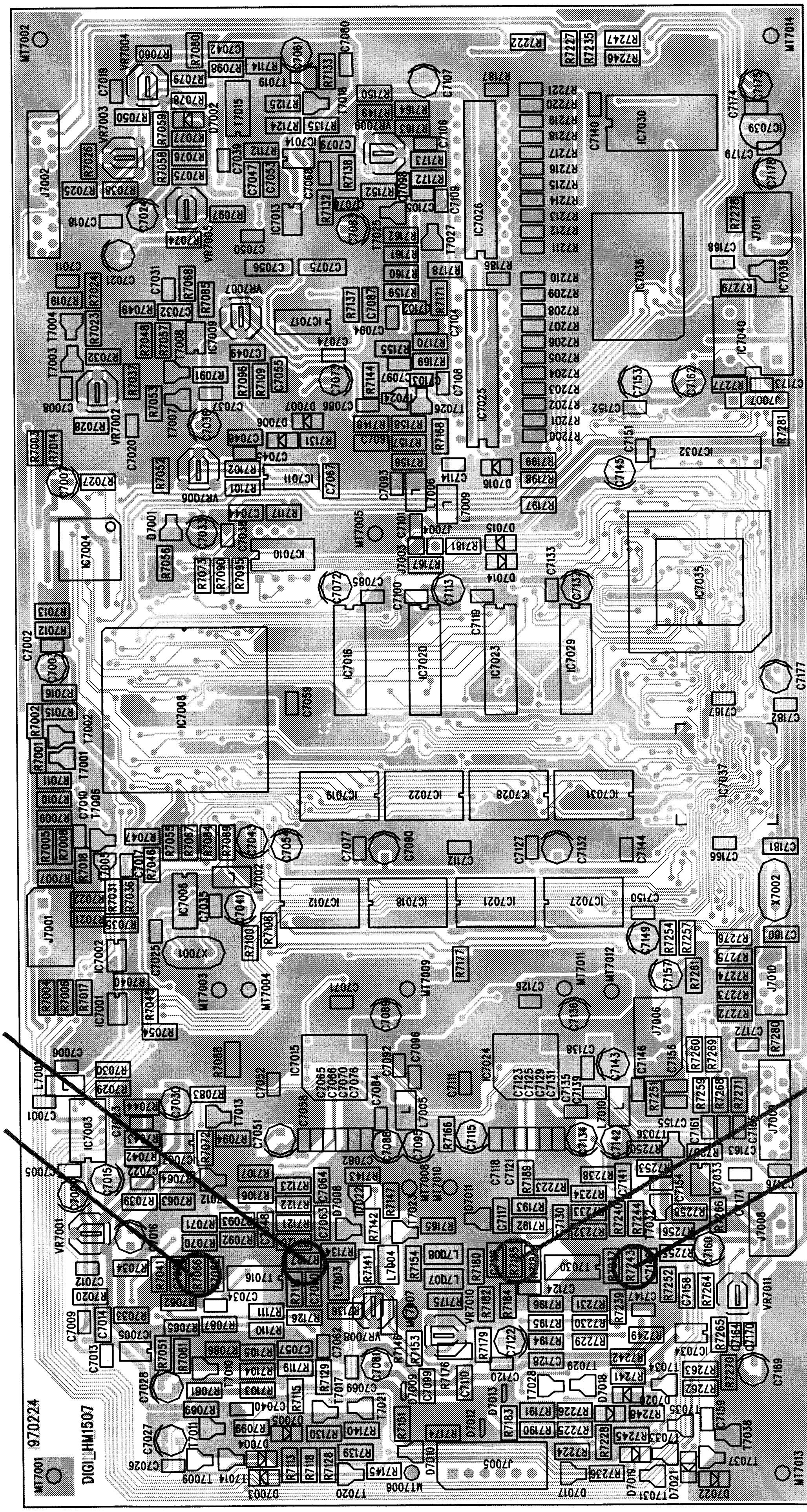

R7127
changed from
825Ω to 866Ω

R7066
changed from
825Ω to 866Ω

R7185
changed form
825Ω to 866Ω

R7243
changed form
825Ω to 866Ω

Subject to change without notice